XMUT303 Analogue Electronics

Note 7: Op Amp based Amplifiers

Topics

- Voltage follower
- Inverting amplifier and non-inverting amplifier
- Summing amplifier
- Difference amplifier
- Differentiator and integrator
- Instrumentation amplifier
- Trans-impedance amplifier
- Lock-in amplifier

7.1. Voltage Follower

The simplest form of op amp-based amplifier circuit is the voltage follower or op amp buffer.

7.1.1. Voltage Follower

For a given voltage follower circuit, the output voltage of the amplifier with respect to input voltage is:

$$V_o = V_i \qquad (Eq.1)$$

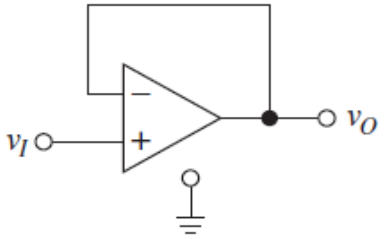

Figure 7.1: Op amp based voltage follower circuit

Characteristics: high input impedance, low output impedance and providing buffer/isolation between the input part of the amplifier with the output part.

7.1.2. Practical Voltage Follower

The voltage follower's high input impedance and low output impedance makes it a good circuit for separating parts of the circuit. It is typically used as a buffer or isolator in the circuit e.g. as shown below it is used to seclude the input part with the load or the output part.

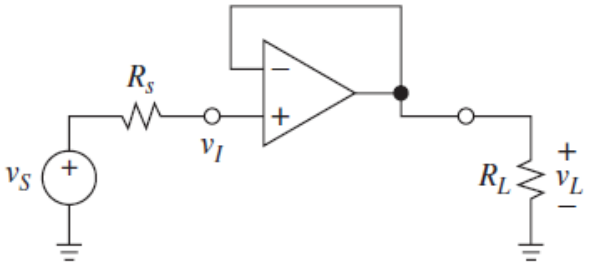

Figure 7.2: Practical voltage follower circuit

The voltage follower's low output impedance makes it a good circuit for driving current into a low-impedance load. But it is important to remember that most op-amps are not designed to deliver large output currents. The circuit below is a high-current load driver with the voltage follower.

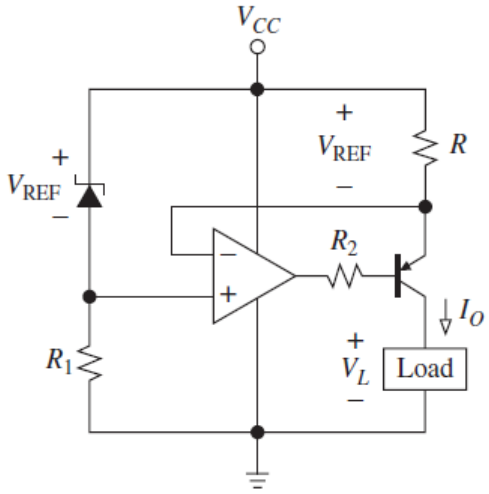

Figure 7.3: Op amp-based voltage follower circuit with load current driver

7.2. Inverting Amplifier

The inverting amplifier is typically chosen as the simplest form of amplifier circuit with gain.

7.2.1. Inverting Amplifier

For a given inverting amplifier circuit the ratio of output voltage with input voltage is:

$$V_o = \left(-\frac{R_2}{R_1}\right) V_i \qquad (Eq. 2)$$

Characteristics: high gain, out of phase waveform, and wide bandwidth.

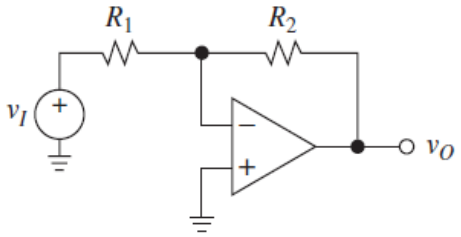

Figure 7.4: Op amp-based inverting amplifier circuit

7.2.2. Practical Inverting Amplifier

Some of the uses of the inverting amplifier are as follows:

- As the output generated is of the 180-degree phase shift, it is used as a phase shifter.
- The signal must be balanced out e.g. mixers when the radio frequency signals are present and used.
- Any circuit that is designed with the sensors (i.e. negative coefficient) with inverting amplifiers at the output stage.

Example for Tutorial 1 – Inverting Amplifier

For the inverting amplifier circuit as shown below, the values of the resistors are R_1 = 1 kΩ and R_2 = 10 kΩ.

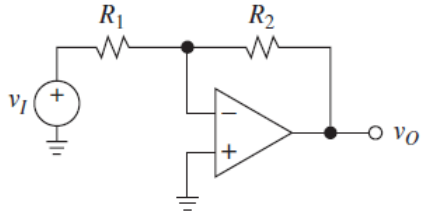

a. Derive expression for the output voltage of the amplifier circuit. [5 marks]

b. Calculate the output voltage of the amplifier circuit when v_I = 1 mV. [5 marks]

c. Describe characteristics of the inverting amplifier circuit. [5 marks]

Solution

a. For a given inverting amplifier circuit, the ratio of output voltage with input voltage is:

$$V_o = -\left(\frac{R_2}{R_1}\right) V_i$$

b. For a given inverting amplifier circuit, its output voltage is:

$$V_o = -\left(\frac{R_2}{R_1}\right) V_i = -\left(\frac{10\ \text{k}\Omega}{1\ \text{k}\Omega}\right)(1\ \text{mV}) = 10\ \text{mV}$$

c. Characteristics: high gain, out of phase waveform, and wide bandwidth.

7.3. Non-Inverting Amplifier

Unlike inverting amplifier, non-inverting amplifier provide amplification without the added phase shift.

7.3.1. Non-Inverting Amplifier

For a given non-inverting amplifier circuit the ratio of output voltage with input voltage is:

$$V_o = \left(1 + \frac{R_2}{R_1}\right) V_i \qquad (Eq.3)$$

Characteristics: high gain, in phase waveform, and wide bandwidth.

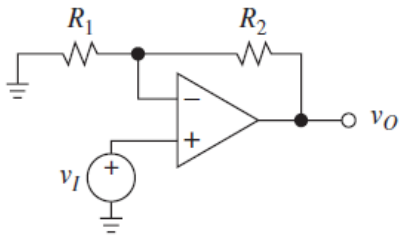

Figure 7.5: Op amp based non-inverting amplifier circuit

7.3.2. Practical Non-Inverting Amplifier

The uses of the non-inverting amplifiers are as follows:

- The circuits that have the requirement of the high input impedance and non-inverting amplifiers are utilised.
- To isolate the respective cascaded amplifier circuits.
- In the varying gains amplifier applications.

Example for Tutorial 2 – Non-inverting Amplifier

For the non-inverting inverting amplifier circuit given below, the values of the resistors are R_1 = 1 kΩ and R_2 = 10 kΩ.

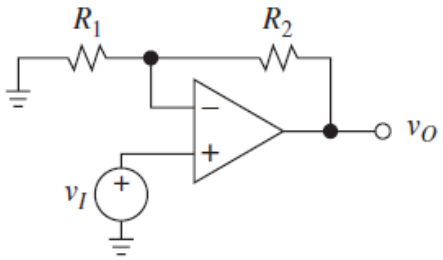

a. Derive the expression for its output voltage. [5 marks]

b. Calculate the output voltage of the amplifier circuit when v_I = 1 mV. [5 marks]

c. Describe characteristics of the non-inverting amplifier. [5 marks]

Solution

a. For a given non-inverting amplifier circuit, the ratio of output voltage with input voltage is:

$$V_o = \left(1 + \frac{R_2}{R_1}\right) V_i$$

b. For a given non-inverting amplifier circuit, the output voltage is:

$$V_o = \left(1 + \frac{R_2}{R_1}\right) V_i = \left(1 + \frac{10\ \text{k}\Omega}{1\ \text{k}\Omega}\right) (1\ \text{mV}) = 11\ \text{mV}$$

c. Like inverting amplifier its characteristics are: high gain, in phase waveform, and wide bandwidth.

7.4. Summing Amplifier

The summing amplifier is a very versatile and complex amplifier circuit as it can perform some basic complex operations.

7.4.1. Summing Amplifier

For the given summing amplifier circuit, the ratio of output voltage with input voltage is:

$$V_o = \left(\frac{R_f}{R_1}\right)V_1 + \left(\frac{R_f}{R_2}\right)V_2 + \left(\frac{R_f}{R_3}\right)V_3 + \cdots \qquad (Eq.4)$$

Characteristics: mixing, selection, and conversion of signals and multiple signals manipulation (i.e. arithmetic operation).

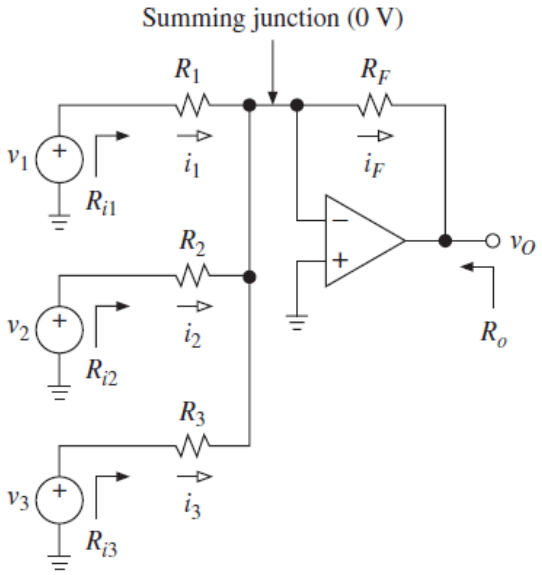

Figure 7.6: Op-amp based summing amplifier circuit

7.4.2. Practical Summing Amplifier

The summing amplifier is often use for processing analog signals e.g. audio mixers:

- Combining signals from various channels and reproduce them into a single track.
- Every single audio input can be configured independently without affecting the output.

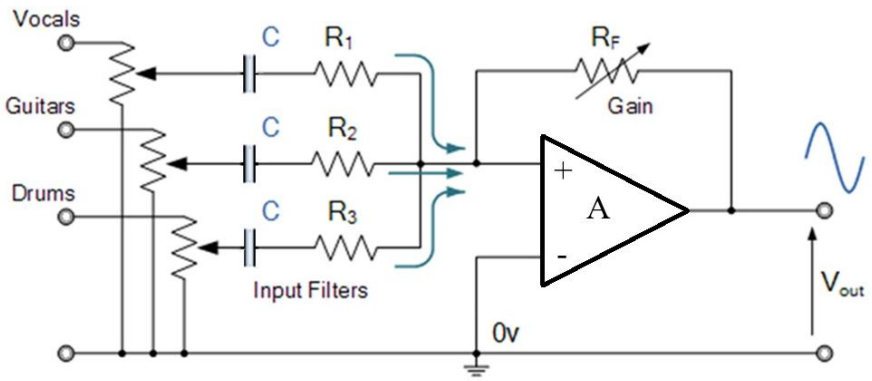

Figure 7.7: Op-amp based summing amplifier circuit for audio mixer application

The summing amplifier is often also used for digital to analog converter (DAC):

- 4-bit DAC will have 4 inputs, the voltage is set to logic 1 or 0 based on binary representation of the value.
- The input resistors of each digit will have a different value, usually in a 2x increment.
- As a DAC, the output will be an analog voltage that represents the binary value set at the input resistors.

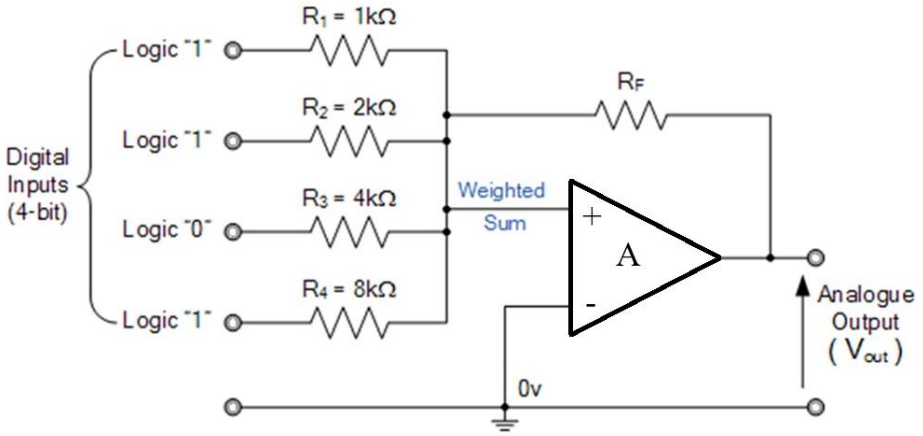

Figure 7.8: Op-amp based summing amplifier circuit for DAC application

Example for Tutorial 3 – Summing Amplifier

For the summing amplifier circuit as shown in the figure below, the values of the resistors are R_F = 100 kΩ, R_1 = 10 kΩ, R_2 = 4.7 kΩ, and R_3 = 6.8 kΩ.

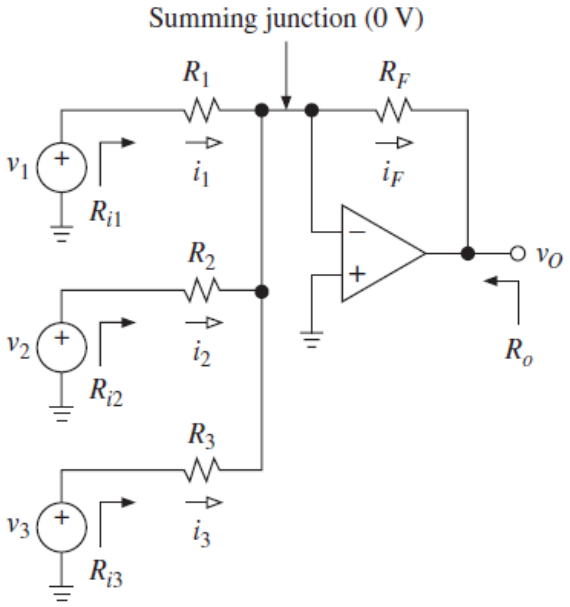

a. Derive the expression for the summing amplifier circuit. [5 marks]

b. Calculate the output voltage of the amplifier circuit when the input voltages are v_1 = 1 mV, v_2 = 5 mV, and v_3 = 8 mV. [5 marks]

c. Describe characteristics of the summing amplifier. [5 marks]

Solution

a. For the given summing amplifier circuit, the ratio of output voltage with input voltage is:

$$V_o = \left(\frac{R_f}{R_1}\right)V_1 + \left(\frac{R_f}{R_2}\right)V_2 + \left(\frac{R_f}{R_3}\right)V_3$$

b. For the given summing amplifier circuit, the output voltage is:

$$V_o = \left(\frac{R_f}{R_1}\right)V_1 + \left(\frac{R_f}{R_2}\right)V_2 + \left(\frac{R_f}{R_3}\right)V_3$$

$$= \left(\frac{10^5}{10^4}\right)(10^{-3}) + \left(\frac{10^5}{4.7\times10^3}\right)(5\times10^{-3}) + \left(\frac{10^5}{6.8\times10^3}\right)(8\times10^{-3})$$

$$= 0.01 + 0.106 + 0.118 = 0.234\ \text{V}$$

c. Characteristics: mixing, selection, and conversion of signals and multiple signals manipulation (arithmetic operation).

7.5. Differentiator Amplifier

The differentiator amplifier is typically used for application that requires differentiation functions.

7.5.1. Differentiator Amplifier

For a given differentiator amplifier circuit the ratio of output voltage with input voltage is:

$$V_o = -RC\left(\frac{dV_i}{dt}\right) \qquad (Eq.5)$$

Characteristics: differentiation function operation, signal conversions, and wave shaping functions.

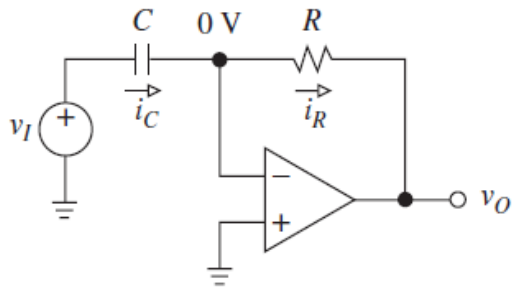

Figure 7.9: Op-amp based differentiator amplifier circuit

7.5.2. Practical Differentiator Amplifier

The differentiator amplifier is often used:

- To generate periodic pulses e.g. triangular and rectangular signals.
- As part of the wave-shaping circuits application.
- To detect high frequency components in the input signal.

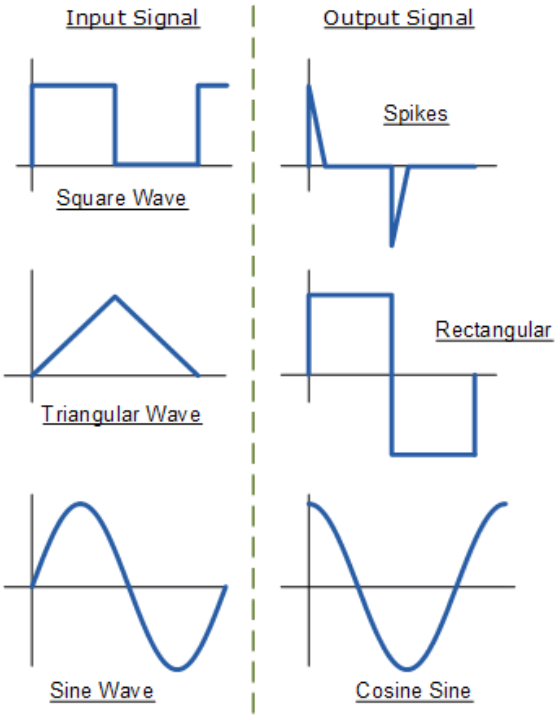

Figure 7.10: Input and output waveforms of differentiator amplifier circuit

Example for Tutorial 4 – Differentiator Amplifier

The following diagram is an op-amp based differentiator amplifier circuit.

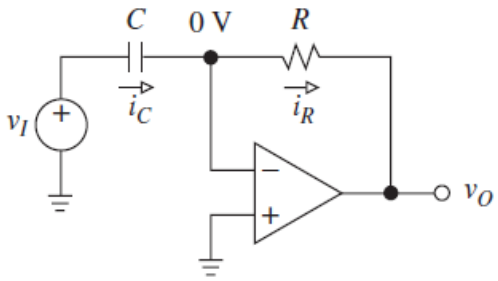

a. Derive the expression for the output voltage of the differentiator circuit. [10 marks]

b. If the values of R = 5.6 kΩ and C = 10 μF, calculate the value of output voltage of the differentiator circuit when it is given a sinusoidal signal, $V_i = \sin(\omega t)$. [5 marks]

c. Describe characteristics of the amplifier. [5 marks]

Solution

a. For a given differentiator circuit, the equation for the output voltage is derived as follow.

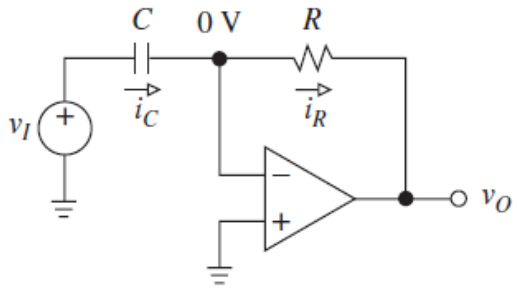

At the input side of the inverting pin, the equation for its current is:

$$i_C = C\frac{d(v_I - v_N)}{dt} = C\frac{dv_I}{dt}$$

At the output side of the inverting pin, the equation for its current is:

$$i_R = -\left(\frac{v_O - v_N}{R}\right) = -\frac{v_O}{R}$$

As a result, equating the above equations and assuming $i_C = i_R$, the output voltage of the differentiator circuit is:

$$C\frac{dv_I}{dt} = -\frac{v_O}{R}$$

Thus

$$v_O = -RC\left(\frac{dv_I}{dt}\right)$$

b. For the given differentiator amplifier circuit, its output voltage is:

$$\begin{aligned} v_O &= -RC\left(\frac{dv_I}{dt}\right) \\ &= -(5.6\text{k}\Omega)(10\mu\text{F})\left(\frac{d\sin(\omega t)}{dt}\right) \\ &= -56\omega\cos(\omega t)\ \text{mV} \end{aligned}$$

c. Characteristics: differentiation function operation, signal conversions, and wave shaping functions.

7.6. Integrator Amplifier

Unlike differentiator amplifier, integrator amplifier provides integration functions.

7.6.1. Integrator amplifier

For a given integrator amplifier circuit, the ratio of output voltage with input voltage is:

$$V_o = -\left(\frac{1}{j\omega RC}\right)V_i \qquad (Eq.6)$$

Characteristics: integration function operation, signals conversion, and wave shaping functions.

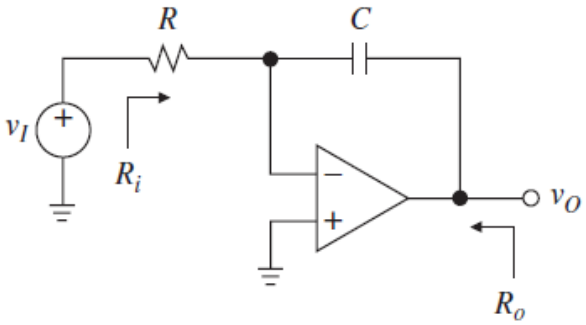

Figure 7.11: Op-amp based integrator amplifier circuit

7.6.2. Practical Integrator Amplifier

Integrator amplifier is often used as:

- Calculus operations in analogue calculation circuit.
- Ramp waveform generators.
- Wave shaping applications.
- DC gain control in control system.
- Analogue-to-digital converters.

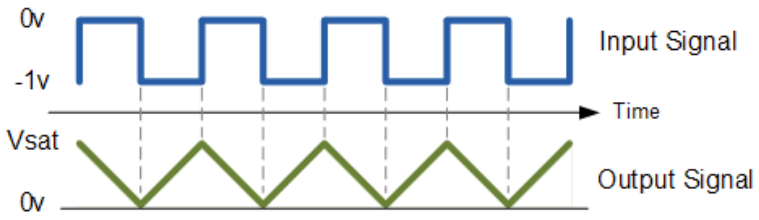

Figure 7.12: Input and output signals of integrator amplifier circuit

Example for Tutorial 5 – Integrator Amplifier

The figure given below is an op-amp based integrator amplifier circuit.

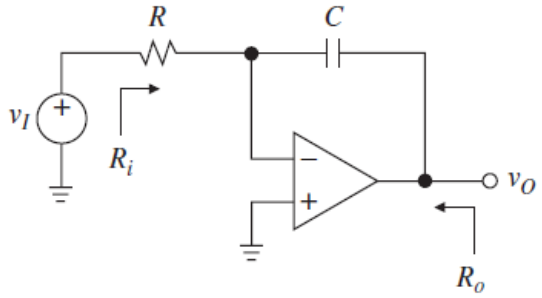

a. Derive the expression for the output voltage of the integrator circuit. [10 marks]

b. Calculate the output voltage of the integrator circuit if R = 8.2 kΩ, C = 3.9 µF, operating frequency of the signal, f = 10 kHz, and input voltage, V_i = 10 mV. [5 marks]

c. Describe characteristics of the amplifier. [5 marks]

Solution

a. For a given integrator circuit, the equation for the output voltage is derived as follow.

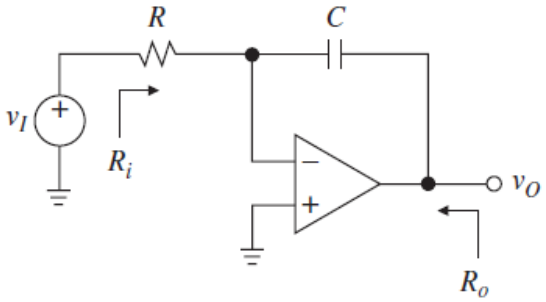

From the input side at the inverting pin, the equation for its current is:

$$i_R = \frac{v_I - v_N}{R} = \frac{v_I}{R}$$

From the output side at the inverting pin, the equation for its current is:

$$i_C = C\frac{d(v_N - v_O)}{dt} = -C\frac{dv_O}{dt}$$

As a result, equating the above equations and assuming that $i_C = i_R$, the output voltage of the differentiator circuit is:

$$\frac{v_I}{R} = -C\frac{dv_O}{dt}$$

Integrating both sides of the equation above, it becomes:

$$\int_0^t \frac{v_I}{R}\,dt = -C\int_0^t \frac{dv_O}{dt}\,dt$$

Thus

$$\int_0^t \frac{v_I}{R}\,dt = -CV_O$$

Therefore, the output voltage is

$$V_O = -\frac{1}{RC}\int_0^t v_I\,dt$$

b. For the given integrator amplifier circuit, if the signal frequency, f = 10 kHz, then its time constant is:

$$t = \frac{1}{\omega f} = \frac{1}{2\pi f}$$

$$= \frac{1}{2\pi(10\text{ kHz})} = 1.59 \times 10^{-5}$$

The output voltage of the integrator is:

$$v_O = -\left(\frac{1}{RC}\right)v_I t$$

$$= -\frac{1}{(8.2\text{k}\Omega)(3.9\mu\text{F})}(10\text{ mV})(1.59 \times 10^{-5})$$

$$= -50\text{ mV}\angle 90°$$

c. Characteristics: integration function operation, signals conversion, and wave shaping functions.

7.7. Difference Amplifier

Due to its differential input sensitivity, difference amplifier is used amplify small signals.

7.7.1. Difference Amplifier

For a given difference amplifier circuit the ratio of output voltage with input voltage is:

$$v_o = \left(\frac{R_2}{R_1}\right)\left[\left(\frac{1+\frac{R_1}{R_2}}{1+\frac{R_3}{R_4}}\right)v_2 - v_1\right] \qquad (Eq.7)$$

Characteristics: differential amplification, high gain, and wide bandwidth.

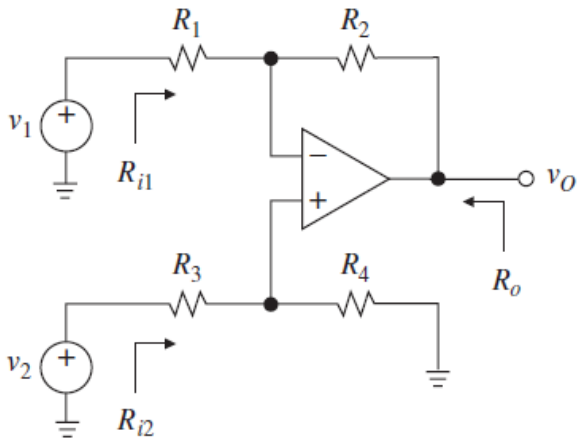

Figure 7.13: Op amp based difference amplifier circuit

7.7.2. Practical Difference Amplifier

Difference amplifier is often used as:

- A series negative feedback circuit if it is implemented with op-amp.
- Acts as a volume control circuit.
- An automatic gain control circuit.
- Some of the differential operational amplifier can be used for Amplitude Modulation.

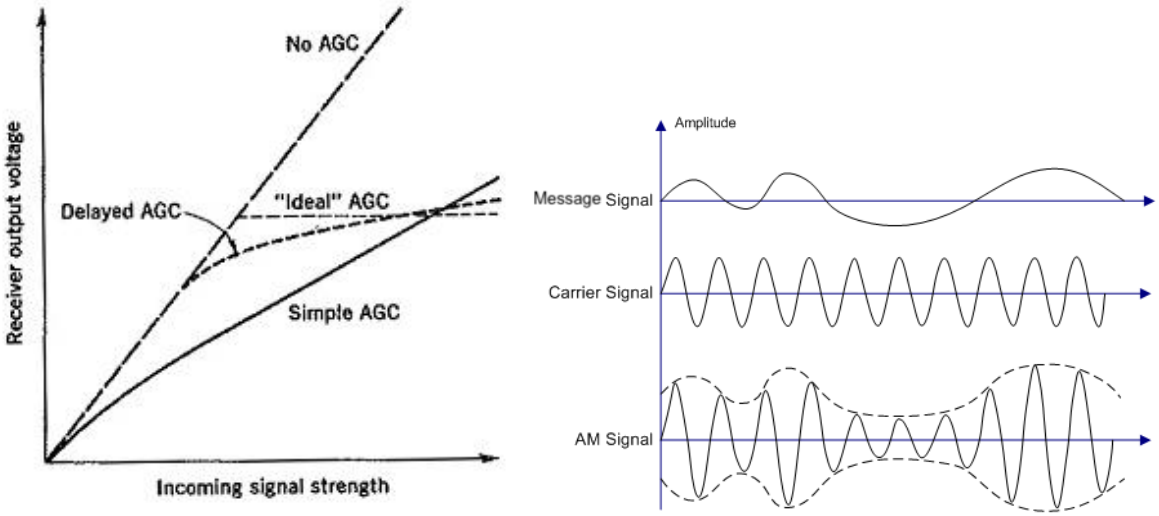

Figure 7.14: Use of difference amplifier as automatic gain control (left) and Amplitude Modulation (AM) detection (right)

7.7.2.1. Practical Difference Amplifier 1

As shown in the figure given below, difference amplifier can be used for low-side current sensing application.

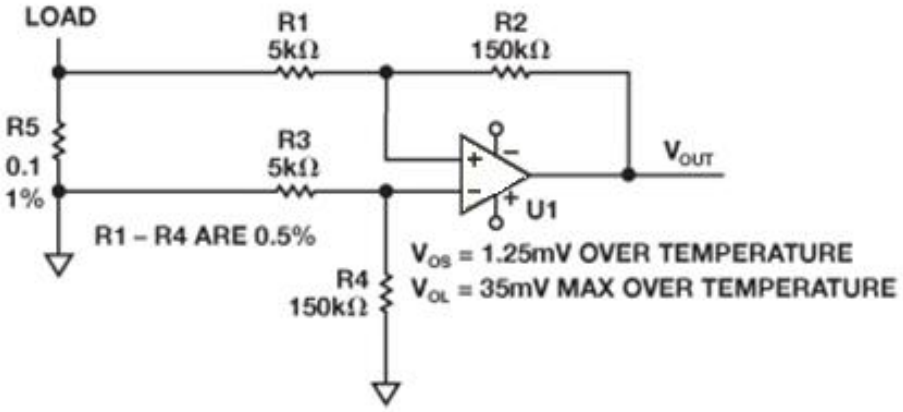

Figure 7.15: Difference amplifier circuit for low-side current sensing application

The following figure shows an alternative circuit for low-side sensing application. In this case, it is a low-side current sensing with high noise gain. The difference amplifier measure the voltage drop across the sensing resistor. Notice that in the alternative circuit, we need more accurate resistor tolerance. The voltage drop across the sensing resistor is:

$$V_{r(sense)} = I \times R_{sense} \qquad (Eq. 8)$$

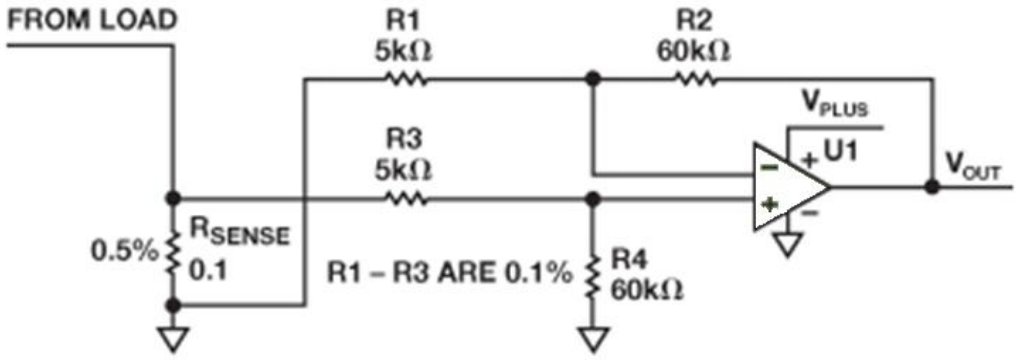

Figure 7.16: Difference amplifier for low-side current sensing with high noise gain

7.7.2.2. Practical Difference Amplifier 2

The design shown in the figure below attempts to measure high-side current. Notice also the high-side noise that exists in the circuit due to high-side current.

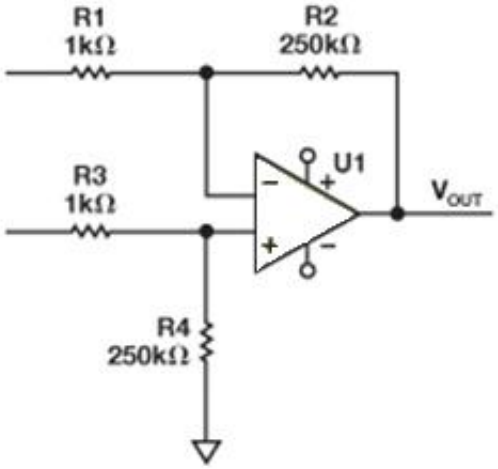

Figure 7.17: Difference amplifier circuit for high-side current sensing

With high noise gains, however, the common-mode voltage of the circuit above will be very close to the voltage across the sense resistors.

Example for Tutorial 6 – Difference Amplifier

The following figure shows an op-amp based difference amplifier circuit.

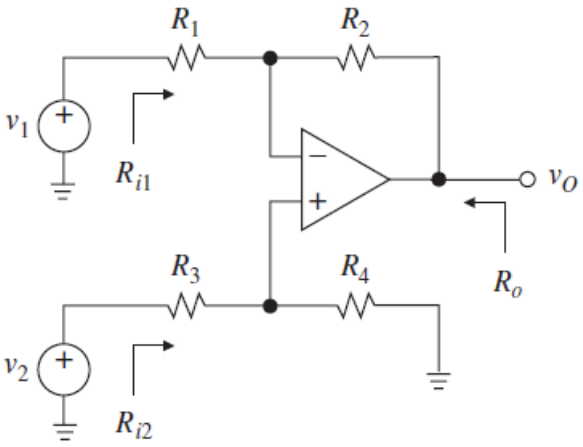

a. Derive the expression for the output voltage of the difference amplifier circuit. [10 marks]

b. For R_1 = 1 kΩ, R_2 = 4.7 kΩ, R_3 = 6.8 kΩ, and R_4 = 8.2 kΩ, calculate the output voltage of the differentiator amplifier circuit if voltages v_1 = 2 mV and v_2 = 5 mV. [5 marks]

c. Describe characteristics of the amplifier. [5 marks]

Solution

a. For the given difference amplifier circuit, the derivation of the equation is as follow.

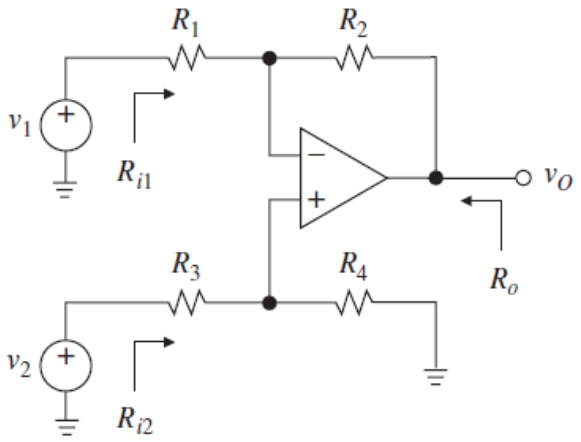

The ratio of output voltage with input voltage of the difference amplifier circuit is:

$$v_o = \left(\frac{R_2}{R_1}\right)\left[\left(\frac{1+\frac{R_1}{R_2}}{1+\frac{R_3}{R_4}}\right)v_2 - v_1\right]$$

b. For the given difference amplifier circuit, its output voltage is:

$$v_o = \left(\frac{R_2}{R_1}\right)\left[\left(\frac{1+\frac{R_1}{R_2}}{1+\frac{R_3}{R_4}}\right)v_2 - v_1\right]$$

$$= \left(\frac{4.7\ \text{k}\Omega}{1\ \text{k}\Omega}\right)\left[\left(\frac{1+\frac{4.7\ \text{k}\Omega}{1\ \text{k}\Omega}}{1+\frac{6.8\ \text{k}\Omega}{8.2\ \text{k}\Omega}}\right)5\ \text{mV} - 2\ \text{mV}\right]$$

$$= 71.226\ \text{mV}$$

c. Characteristics: differential amplification, high gain, and wide bandwidth.

7.8. Instrumentation Amplifier

Instrumentation amplifier adds buffer circuits on the inputs of the difference amplifier. This increases impedance and isolation at the inputs.

7.8.1 Instrumentation Amplifier

For even better performance than difference amplifiers:

- Very high $Z_{in.}$
- Very high CMRR.

Further characteristics: differential amplification, high and adjustable gain, wide bandwidth, and low output impedance.

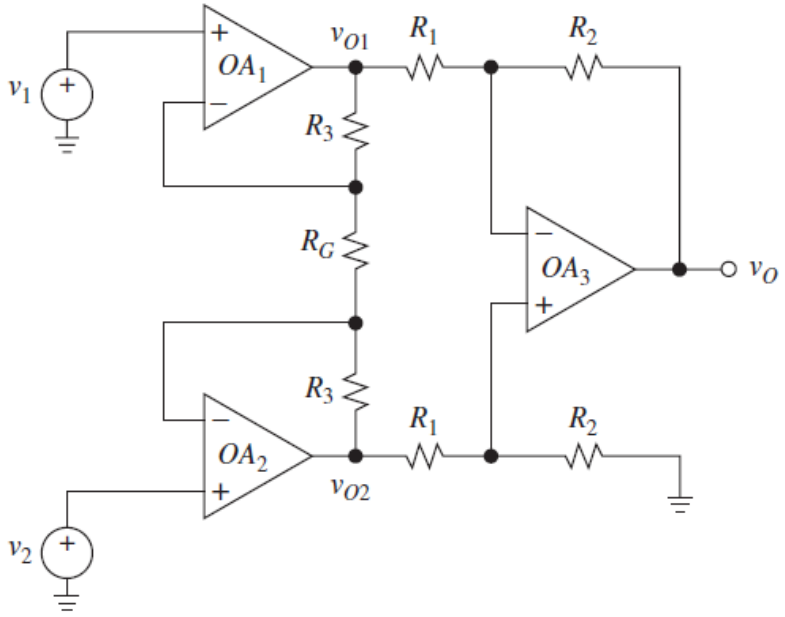

Figure 7.18: Op amp based instrumentation amplifier circuit

The gain of the difference amplifier

$$A_1 = \frac{R_2}{R_1} \qquad (Eq.9)$$

The gain of the input buffers

$$A_2 = 1 + \frac{2R_3}{R_G} \qquad (Eq.10)$$

Overall gain

$$A = A_1 A_2 \qquad (Eq.11)$$

Output voltage of instrumentation amplifier:

$$v_o = \left(\frac{R_2}{R_1}\right)\left(1 + \frac{2R_3}{R_G}\right)(v_2 - v_1) \qquad (Eq.12)$$

7.8.2. Practical Instrumentation Amplifier

Instrumentation amplifier is typically used as:

- Extracting very weak signals from noisy environments e.g. in circuits that employ sensors that take measurements of physical parameters.
- Very high impedance and tiny signals of biomedical sensors, such as blood pressure sensors, ultrasound transducers, etc.
- Industrial automation, where many systems use current flow to relay measurements and control remote installations.

Example of Practical Instrumentation Amplifier

A simple temperature controller system can be constructed using a thermistor as the transducer device, in the resistive bridge

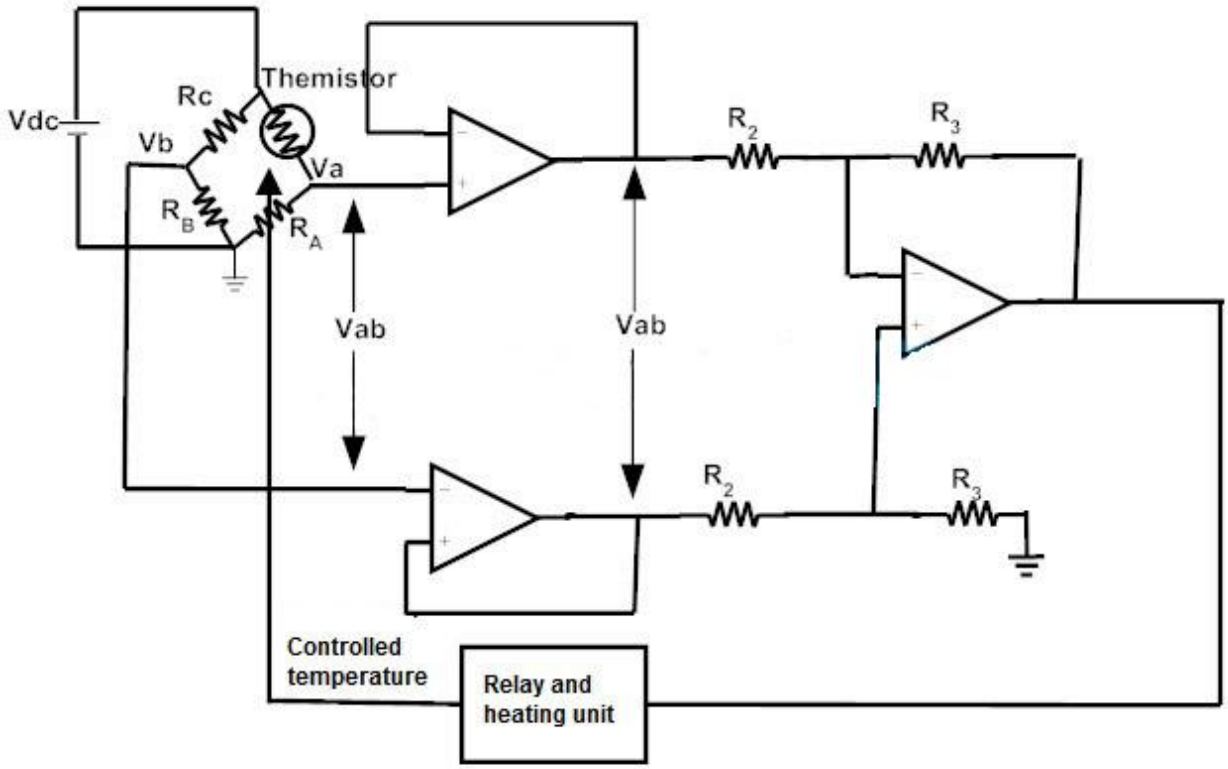

Figure 7.19: Instrumentation amplifier for a simple temperature controller application

The circuit in the figure above, use of resistive bridge for more accurate voltage measurement. The resistive bridge is kept balanced for some reference temperature. For any change in this reference

temperature, the instrumentation amplifier will produce an output voltage. This voltage drives the relay which in turn turns ON/OFF the heating unit, thereby controlling the temperature.

Example for Tutorial 7 – Instrumentation Amplifier

The op-amp based instrumentation amplifier circuit is as shown in the following figure. The values of the resistors in the circuit are R_1 = 1 kΩ, R_2 = 10 kΩ, R_3 = 2.2 kΩ, and R_G = 1 kΩ.

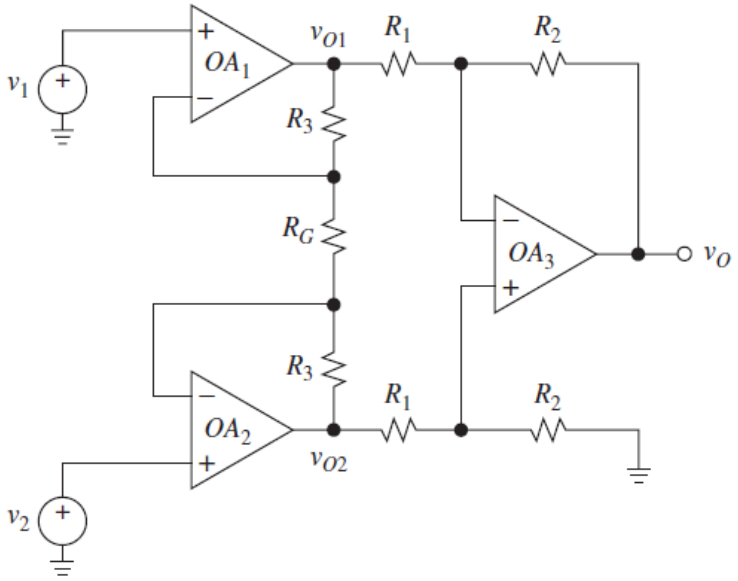

Determine the following parameters of the instrumentation amplifier circuit.

a. Derive the expression for the output voltage of the instrumentation amplifier. [10 marks]

b. The gain of the difference amplifier of the amplifier. [5 marks]

c. The gain of input buffer of the amplifier. [5 marks]

d. The overall gain of the amplifier. [5 marks]

e. The output voltage of the amplifier when v_1 = 10 mV and v_2 = 15 mV. [5 marks]

f. Describe characteristics of the amplifier. [5 marks]

Solution

a. For the following instrumentation amplifier circuit, the equation is derived as follow.

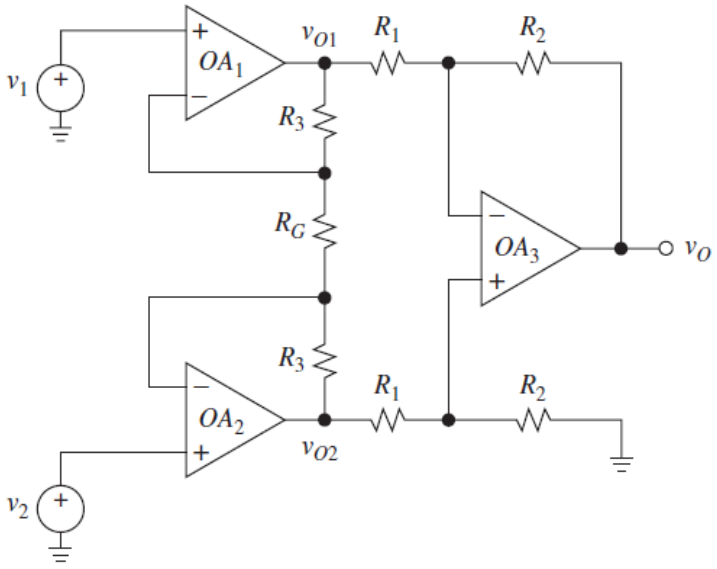

b. The gain of the difference amplifier of the amplifier is:

$$A_1 = \frac{R_2}{R_1} = \frac{10\ \text{k}\Omega}{1\ \text{k}\Omega} = 10$$

c. The gain of the input buffers of the amplifier is:

$$A_2 = 1 + \frac{2R_3}{R_G} = 1 + \frac{2(2.2\ \text{k}\Omega)}{1\ \text{k}\Omega} = 5.4$$

d. The overall gain of the amplifier is:

$$A = A_1 A_2 = (10)(5.4) = 54$$

e. The output voltage of instrumentation amplifier is:

$$v_o = \left(\frac{R_2}{R_1}\right)\left(1 + \frac{2R_3}{R_G}\right)(v_2 - v_1)$$

$$= \left(\frac{10\ \text{k}\Omega}{1\ \text{k}\Omega}\right)\left[1 + 2\left(\frac{2.2\ \text{k}\Omega}{1\ \text{k}\Omega}\right)\right](15\ \text{mV} - 10\ \text{mV})$$

$$= 0.27\ \text{V}$$

f. For even better performance than difference amplifiers:

- Very high Z_{in}.

- Very high CMRR.

Further characteristics: differential amplification, high and adjustable gain, wide bandwidth, and low output impedance.

7.9. Trans-Impedance Amplifier

Trans-impedance amplifier is useful for conversion operation such as current-to-voltage converter. For voltage-to-current converter you use trans-conductance amplifier instead.

7.9.1. Trans-impedance Amplifier

Current-to-voltage converter (I-V converter), also called a trans-impedance amplifier. It accepts an input current and generates an output voltage. The gain is proportional to the feedback resistor R and is specified in volts/amp.

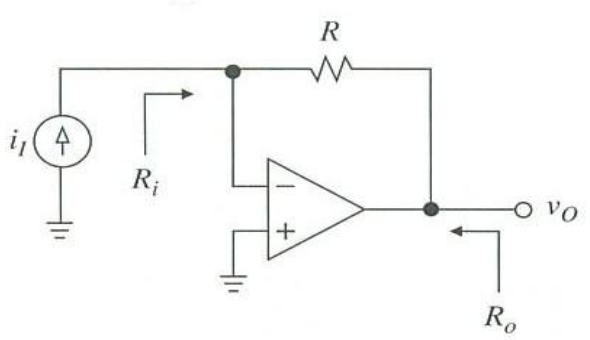

Figure 7.20: Op amp based trans-impedance amplifier circuit

For R = 1 kΩ, the sensitivity is 1 V/mA, the ratio of output voltage with input voltage of the trans-impedance amplifier is:

$$v_0 = -Ri_I \qquad (Eq.13)$$

7.9.2. Practical Trans-Impedance Amplifier

A popular use for an I-V converter is a photodetector amplifier. A common photodetector is the silicon photo diode e.g. it produces a reverse current in proportion to incident light.

Sometimes a reverse bias voltage is applied to reduce the photo diode capacitance and hence allow higher speed operation. This is important for fiber-optic communication applications or whenever the diode has to respond to rapidly changing light levels.

Given in the circuits below are the use of the I-V converter for photo detection application. The circuits are: with negative bias voltage (left) and without the bias voltage (right).

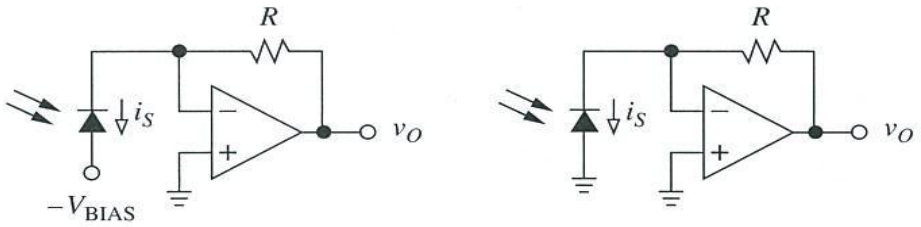

Figure 7.21: Op amp based trans-impedance amplifier circuit for photo detection application

7.9.3. Examples of Photodetectors

There are a number of photodetectors that can be used for photo detection applications.

7.9.3.1. VEMD5060X01

VEMD5060X01 is a high speed and highly sensitive PIN photodiode with a highly linear photo response.

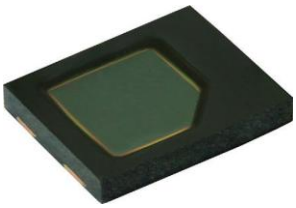

Figure 7.22: VEMD5060X01 Photodetector

Low profile surface mount device (SMD) including the chip with a 7.5 mm^2 sensitive area detecting visible and near infrared radiation.

7.9.3.2. BPW34

BPW34 is a PIN photodiode with high speed and high radiant sensitivity in miniature, flat, top view, clear plastic package.



Figure 7.23: BPW34 Photodetector

This photodiode is sensitive to visible and near infrared radiation.

Example for Tutorial 8 – Transimpedance Amplifier

For a transimpedance amplifier circuit as shown in the figure below, the resistance of resistor R is 10 kΩ.

a. Determine the output voltage (v_O) when the current i_I is 10 μA and determine the input and output equivalent resistance of the circuit if the op amp used is 741. [10 marks]

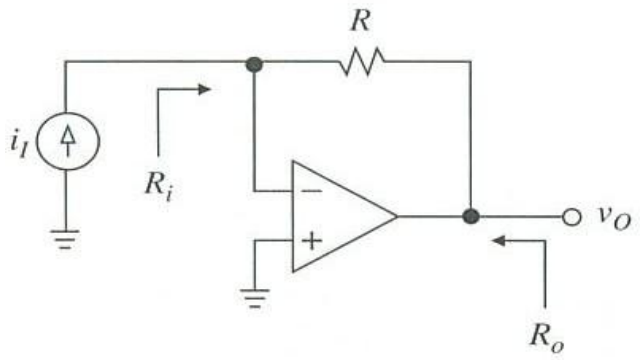

b. Describe characteristics of transimpedance amplifier. [5 marks]

Solution

a. The output voltage in the transimpedance amplifier circuit is calculated from:

$$v_O = -Ri_I = -(10 \times 10^3)(10 \times 10^{-6}) = -0.1 \text{ V}$$

As a result, the output voltage is -0.1 V.

The input equivalent resistance $R_i = R = 10$ kΩ.

If the op amp used is 741, the output equivalent resistance is the output resistance of the 741 op amp which is typically 75 Ω.

b. The transimpedance amplifier function is used to convert current to voltage. It has the equivalent input and output resistances that are determined by the feedback resistor used in the circuit and output resistance of the op amp respectively.

7.10. Lock-in Amplifier

Further example of op amp based amplifier is the lock-in amplifier. This amplifier circuit is more complex than the other examples of op amp base amplifier circuits.

7.10.1. Lock in Amplifier

Lock-in amplifiers are used in the areas that require measuring small voltages in noisy environments. It is used to separate a small, narrow-band signal from interfering noise. If the frequency of the desired signal is known, the instrument can "lock in" onto the signal using a matching reference frequency (and phase).

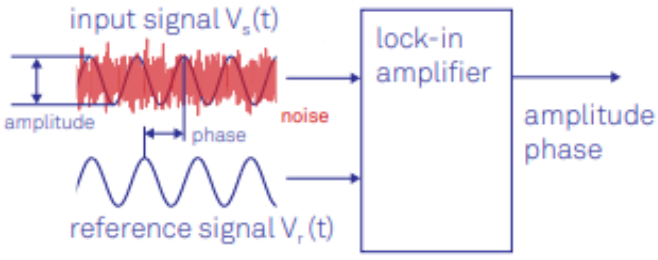

Figure 7.24: Mechanism of lock-in amplifier

Components of lock-in amplifier:

- Amplifier: magnify small signals.
- Voltage controlled oscillator: generate reference waveform signal.
- Mixer: modulation/demodulation of signals.
- Low pass filter: remove low frequency signals.
- Phase sensitive detector: measure phase difference between reference and measured signals.

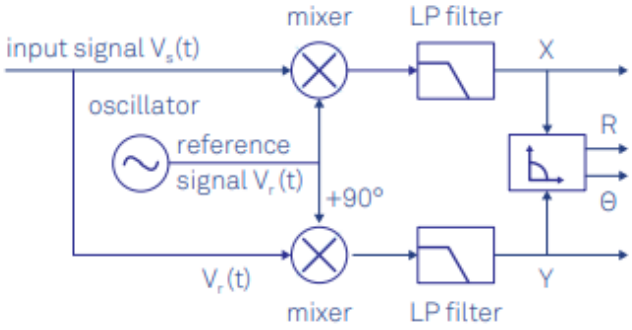

Figure 7.25: Components of lock-in amplifier

7.10.2. Practical Lock-in Amplifier

Example of lock-in amplifier is based on the AD630 balanced modulator demodulator. It acts as a detector and narrow-band filter combined e.g. a synchronous demodulator followed by a low-pass filter.

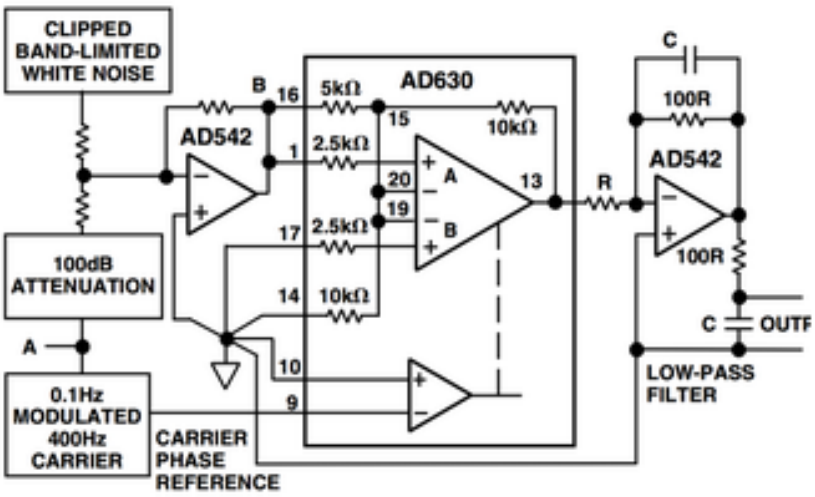

Figure 7.26: Lock-in amplifier with AD630

Graph below shows the recovery of a signal modulated at 400 Hz from a noise signal approximately 100,000 times larger.

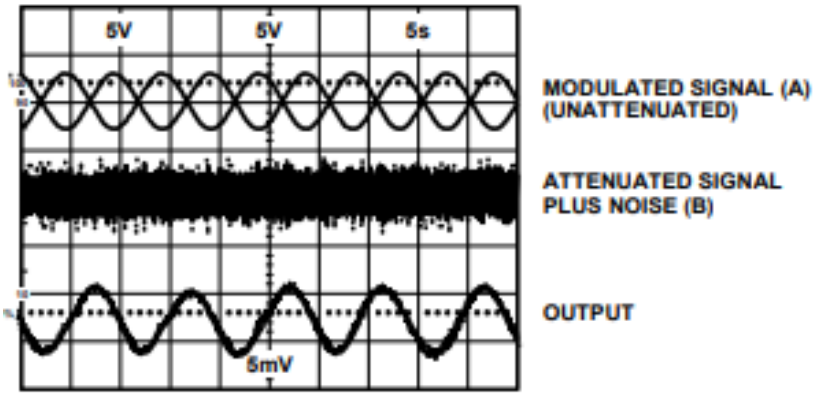

Figure 7.27: Input and output waveforms of lock-in amplifier

7.10.2.1. Example of Practical Lock-in Amplifier 1

In the diagram given below, lock-in amplifier is used for detecting light transmitter and sensor pair for testing surface area of a material situated in a noisy environment. In this case, a light source is modulated at 1 kHz illuminates a test surface.

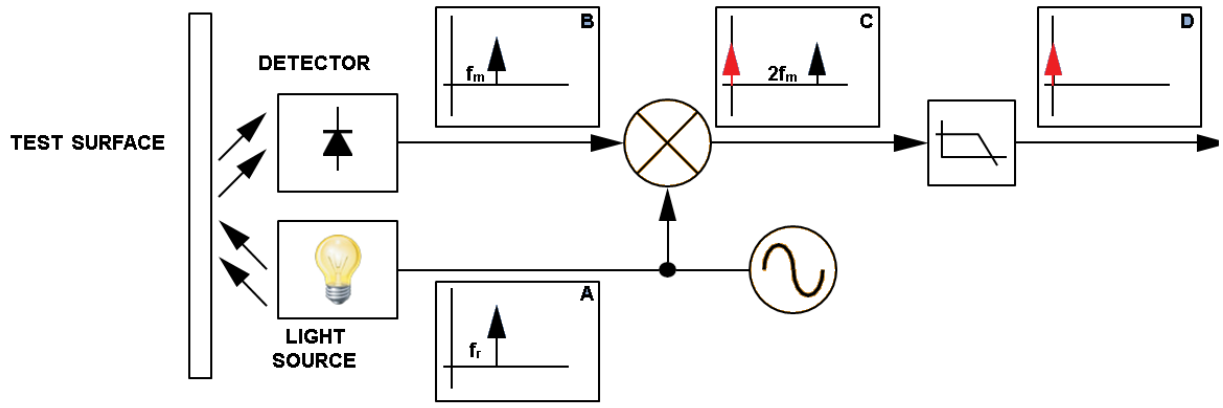

Figure 7.28: Lock-in amplifier for material surface testing application

The output of the detector is a weak 1 kHz signal plus some other dominating components at DC and above. After multiplying with our 1 kHz reference, our signal of interest is shifted to DC. Other components are low-pass filtered out.

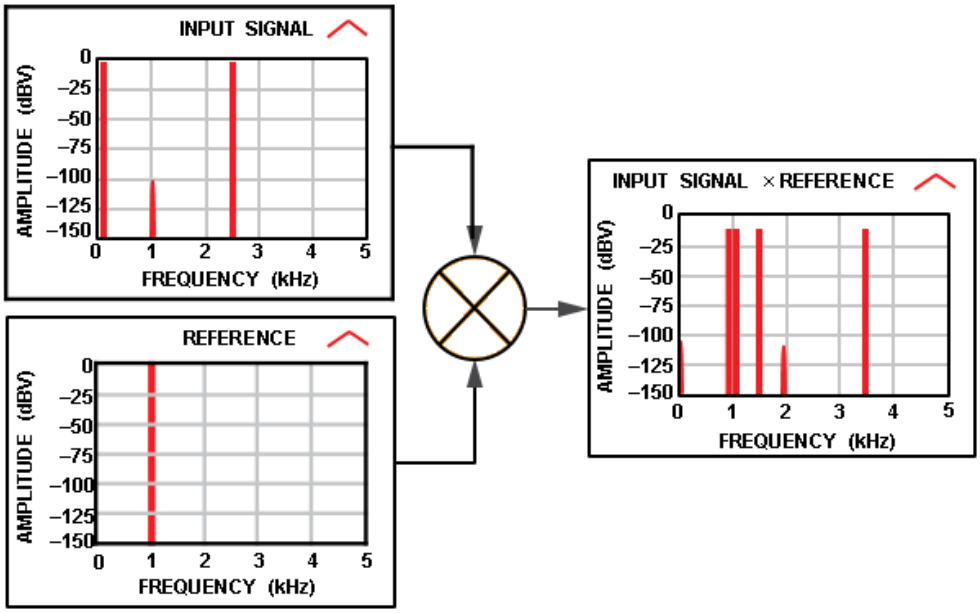

Figure 7.29: Modulation process of input signal with reference signal

7.10.2.2. Example of Practical Lock-In Amplifier 2

The figure below shows an approach to implement a lock-in amplifier for measuring noisy sounds from microphone. Generating a sine wave to modulate the signal source can be impractical, so some systems use a square wave instead.

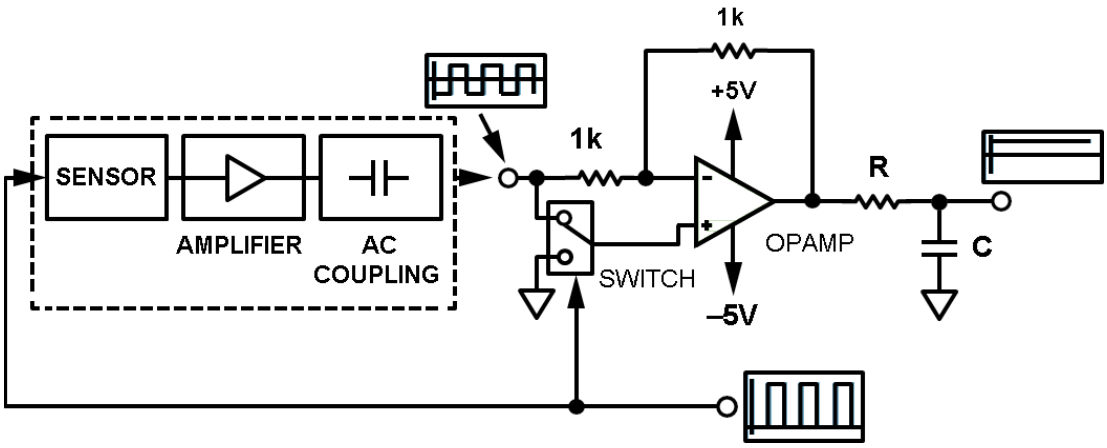

Figure 7.30: Lock-in amplifier for measuring noisy sounds from microphone application

In the given application, the audio signal that we are interested is modulated with a square wave. Based on the modulation reference signal, the op amp is configured for gain of +1 (reference = on) or -1 (reference = off). This process is the same as multiplying the detected signal with the reference square wave signal. The rest of the signals are filtered out by the low pass filter.

Example for Tutorial 9 – Lock-in Amplifier

Given in the figure below is an analogue lock-in amplifier circuit that is used for retrieving a specific signal in a data transmission application circuit. The signal will be measured by the lock-in amplifier across a 1 MΩ resistor. It is expected that the magnitude of the signal to be measured would be about 1 µV and the noise of lock-in amplifier is approximately 10 nV/√Hz.

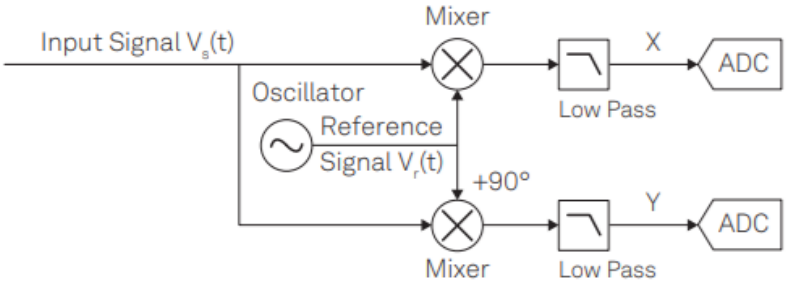

a. Determine the specification of the low-pass filter that will give an SNR of 10 for the measurement of the signal. Choose a fourth order filter for the design. [10 marks]

b. Determine further design precautions needed that would increase the accuracies of the signal measurement. [5 marks]

Note:

Equation for calculating the thermal noise with power spectral density:

$$v_n^2 = 4k_B TR$$

Thus, at T = 300°K, the thermal noise of the resistor used is:

$$\sqrt{v_n^2} = 0.127\sqrt{R}\ \text{nV}/\sqrt{\text{Hz}}$$

Equation for calculating the SNR of the signal:

$$\text{SNR} = \frac{V_{signal}}{(V_n)(\sqrt{f_{NEP}})}$$

The table given below shows the characteristics of up to 8th order low-pass filter circuit that is matched for use with the lock-in amplifier circuit.

Order	Time	Roll-off		Bandwidth in units of $1/\tau$			Settling times in units of τ			
n	constant τ	dB/oct	dB/dec	f_{-3dB}	f_{NEP}	f_{NEP}/f_{-3dB}	63.2%	90%	99%	99.9%
1	1	6	20	0.159	0.250	1.57	1.00	2.30	4.61	6.91
2	1	12	40	0.102	0.125	1.23	2.15	3.89	6.64	9.23
3	1	18	60	0.081	0.094	1.16	3.26	5.32	8.41	11.23
4	1	24	80	0.069	0.078	1.13	4.35	6.68	10.05	13.06
5	1	30	100	0.061	0.069	1.12	5.43	7.99	11.60	14.79
6	1	36	120	0.056	0.062	1.11	6.51	9.27	13.11	16.45
7	1	42	140	0.051	0.057	1.11	7.58	10.53	14.57	18.06
8	1	48	160	0.048	0.053	1.10	8.64	11.77	16.00	19.62

Solution

a. We want to measure a sinusoidal signal with amplitude of 1 µV across a 1 MΩ resistor with a SNR larger than 10. Such a resistor R exhibits a thermal noise with a power spectral density of $v_n^2 = 4k_B TR$, which amounts to about:

$$\sqrt{v_n^2} = 0.127\sqrt{R}\ \text{nV}/\sqrt{\text{Hz}} = 127\ \text{nV}/\sqrt{\text{Hz}} \qquad \text{at T} = 300°\text{K}$$

In this example, thermal noise is identified as the dominant noise source. It is clearly stronger than the lock-in input noise of typically less than 10 nV/√Hz. We can thus calculate the SNR as:

$$\text{SNR} = \frac{1\ \mu\text{V}}{(127\ \text{nV}/\sqrt{\text{Hz}})(\sqrt{f_c})} = 10$$

By solving this equation for cut-off frequency f_c, we calculate that we need to select a filter bandwidth of 620 mHz or less to achieve a SNR of 10. We choose a 4th order filter.

From the table above, we can calculate the corresponding cut-off frequency $f_{-3\text{dB}}$ = 549 mHz, the time constant τ = 126 ms, and the settling time to 1% is 1.26 s.

b. To further increase the SNR by a factor of 10, we would need to decrease the filter bandwidth by a factor of 100, because the noise amplitude is proportional to the square root of the bandwidth.

   The settling time to 1% then increases to more than 2 minutes. The lock-in technique can support such long measurements because it is insensitive to DC offset drift in the input signal.

   Nonetheless, other sources of drift such as changes in the resistance, or in amplifier gain, may affect long measurements. Maintaining stable conditions, especially a constant temperature, is then crucial.