XMUT303 Analogue Electronics

Note 8: Op Amp based Applications

Topics

- Op-amp based rectifier.
- (Voltage) comparator.
- Op-amp based oscillator.

8.1. Rectifier

The first practical implementation of op-amp based circuit that we cover in this chapter is the rectifier application. Rectifier circuit has many uses in electronics e.g. signal detection, waveform shaping, etc.

8.1.1. Op Amp based Rectifiers (AC to DC conversion)

Op amp based (active) rectifier circuits are very similar to (diode) passive-based rectifiers. As shown in the figure below, passive rectifier can be classified into half-wave rectifier and full-wave rectifier. Then, full-wave rectifier can be categorised further into CT type and bridge type rectifiers. All of the typical diode circuits involve the forward biased voltage of the diode. For a rectification circuit, to work well, it is required that the input voltage be considerably larger than 0.6 V.

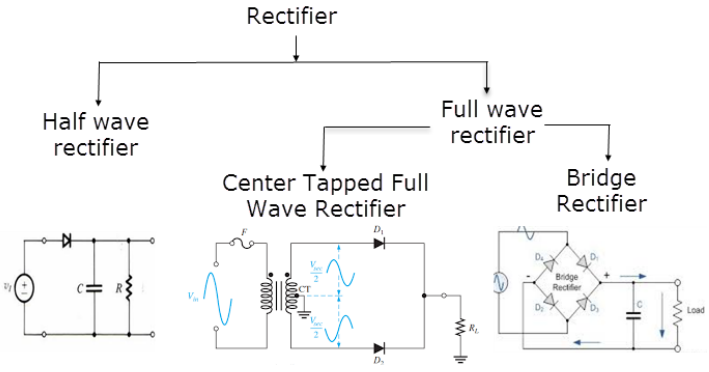

Figure 8.1: Classification of op amp-based rectifier

The circuits can be made more sensitive using active elements and using operational amplifiers. The high gain and high input and low output impedance characteristics of op amp can make the circuit to be more precise in terms of detecting changes in the rectification process of the signal. An example of a "precision" half-wave rectifier is the circuit shown below.

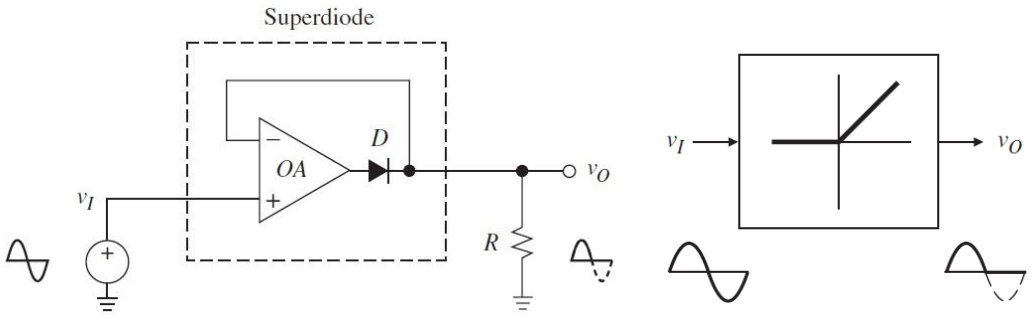

Figure 8.2: Precision half-wave rectifier circuit (left) and its quadrant of operation (right)

As illustrated in the figure below, if the input voltage is positive, the output of the op-amp (V_A) will become positive, causing the diode to conduct, establishing a feedback path. So, due to op-amp based feedback loop, the output voltage is the same as the input voltage, to within a few millivolts.

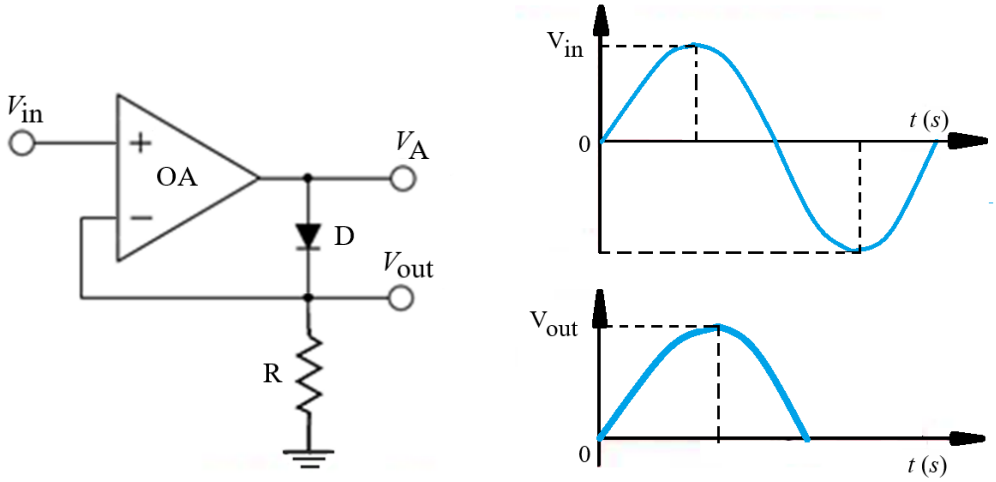

Figure 8.3: Precision half-wave rectifier circuit when input voltage is positive

If the input voltage is negative, the op-amp output V_A will be a large negative voltage (its saturation limit), no current will flow through the diode, and so the output voltage will be zero. These mechanisms are further illustrated in the figures given below.

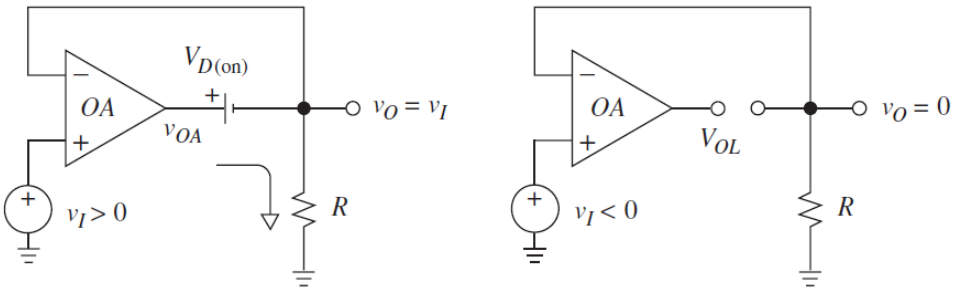

Figure 8.4: Precision half-wave rectifier when input voltage is negative

8.1.2. Op Amp based Inverting Half-Wave Rectifier

A more sophisticated version of half-wave rectifier circuit as shown below prevents the op-amp reaching saturation. So, it can respond more quickly to changes in the input waveform.

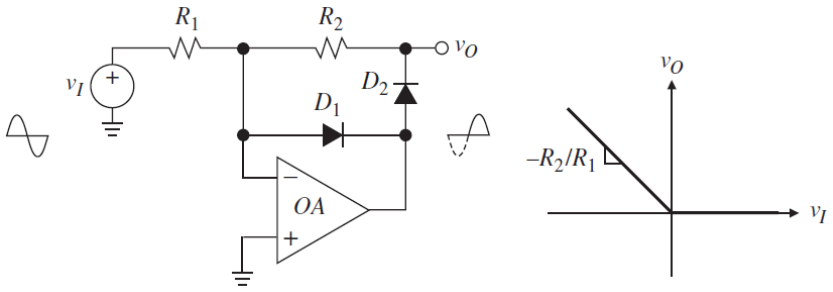

Figure 8.5: Op amp based inverting half-wave rectifier circuit (left) and its quadrant of operation (right)

In the above circuit, diode D_2 is the main rectifier. When $V_{in} < 0$, D_1 is reverse biased, while D_2 conducts, and so $V_{out} = -V_{in}$. Whereas when $V_{in} > 0$, D_1 conducts, while D_2 is reverse biased, and so $V_{out} = 0$. If D_2 is the main rectifier, then D_1 prevents the output swinging to the negative supply voltage. This circuit is an inverting rectifier, so it is often followed by an inverting amplifier stage. Furthermore, we can change the operating quadrant by reversing the diodes.

8.1.3. Op Amp based Full-Wave Rectifier

One way of synthesising a full-wave rectifier is by combining the signal itself with its inverted half-wave rectified version in a 1 to 2 ratio, as shown below. In the given circuit, the first op-amp is a half-wave rectifier like that shown previously but with diodes in the opposite direction.

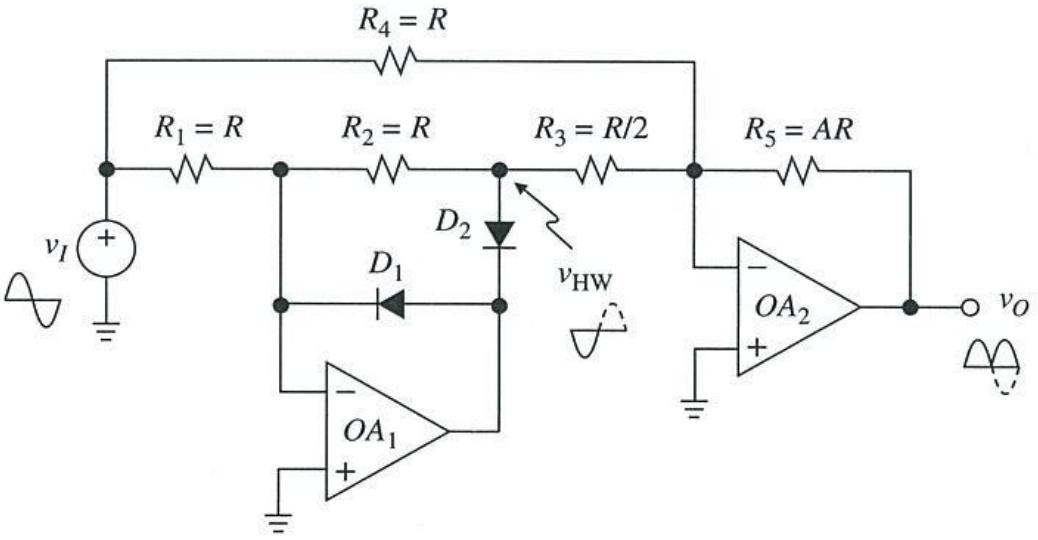

Figure 8.6: Op-amp based full-wave rectifier

Furthermore, in the circuit, the second op-amp is an inverting summing amplifier with its output is calculated as follows:

$$V_{out} = -V_{in} - 2(-V_{in}) = +V_{in} \qquad (Eq.1)$$

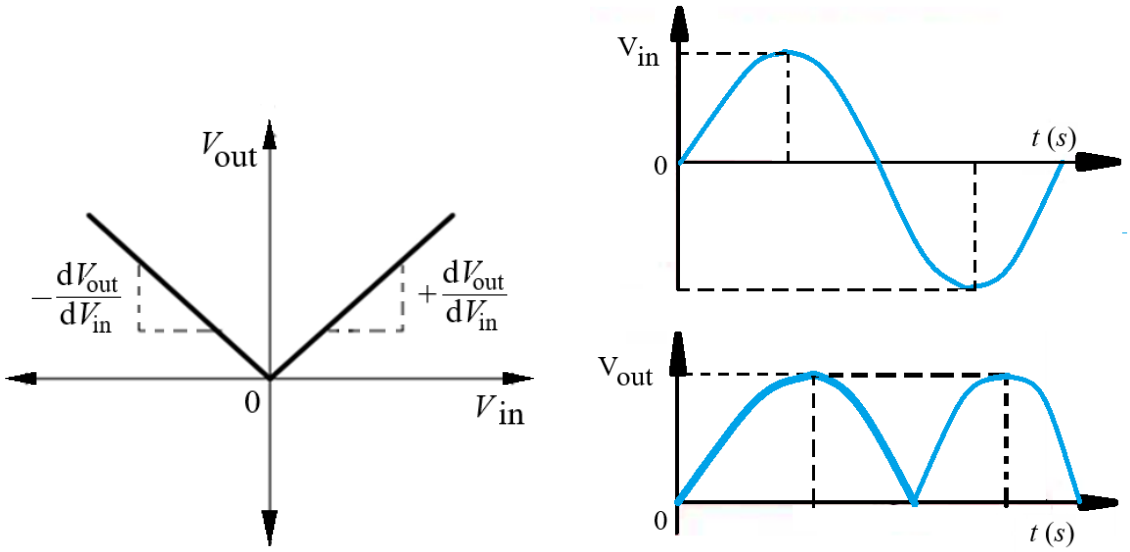

Figure 8.7: Quadrant of operation (left) and transient response (right) of op-amp based full-wave rectifier

When $V_{in} > 0$, D_2 conducts and D_1 is reverse biased so the output of this op-amp is $V_{out} = -V_{in}$.The output voltage of second op amp is equal to AV_{in}. When $V_{in} < 0$, D_2 is reverse biased and D_1 conducts so the output is zero. This $-V_{in}$ will appear in the output of the second op amp as AV_{in}.

8.1.4. Precision Peak Detector

Another useful op-amp based rectifier circuit is the peak detector as shown below. Although active op-amp circuits can behave more like ideal diodes in many situations, they are limited by the performance of the op-amp.

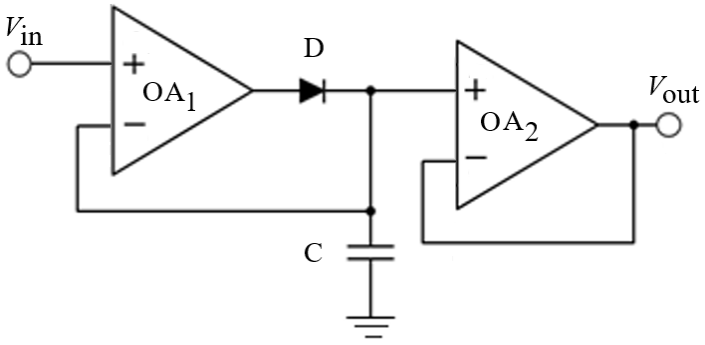

Figure 8.8: Precision peak detector circuit

In particular, the op-amp will have e.g. upper frequency limit much lower than a simple diode, finite slew-rate and output currents of only mA or tens of mA. The following figure illustrates the transient response of the circuit given above.

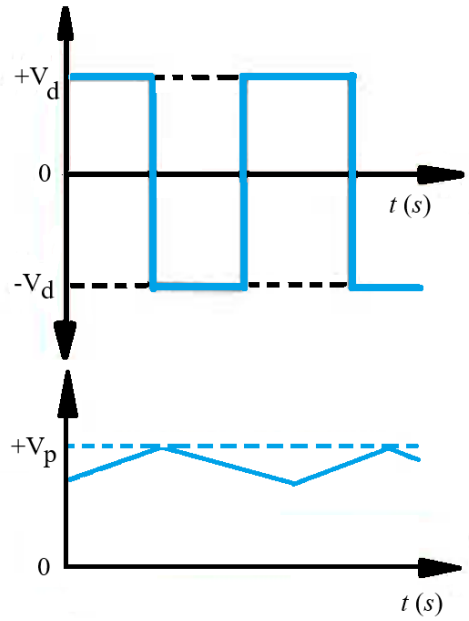

Figure 8.9: Transient response of precision peak detector

A diode plus capacitor can form an essentially "passive" peak detector. However, by adding an op-amp with feedback around the diode, we can eliminate the diode voltage drop. We end up with a much more linear peak detector. This is at the cost of a few extra parts (and reduced bandwidth).

Example for Tutorial 1 – Precision Rectifier Circuit

Given in the figure below is a precision half-wave rectifier circuit. Describe the operation of the given circuit by considering two distinct cases of:

a. $V_I > 0$ V. [3 marks]

b. $V_I < 0$ V. [3 marks]

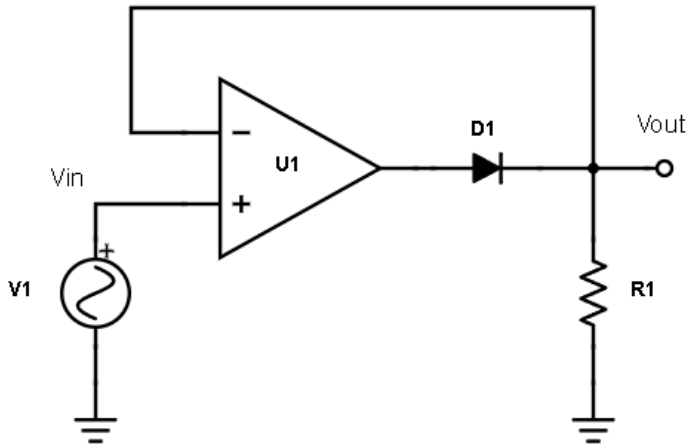

Solution

Description of operation of precision half-wave rectifier circuit.

a. Case 1: $V_I > 0$ V

For closed loop feedback op-amp $V_p = V_n$, due to virtual ground, when $V_I > 0$ V, op-amp tries to keep $V_o = V_n = V_p = V_I$. It does this because forward biasing diode provides closed loop feedback path.

The voltage drop across forward bias diode $V_d(on)$ = 0.7 V. To accommodate the voltage drop across diode, the op-amp swings about 0.7 V higher than V_o.

b. Case 2: $V_I < 0$ V

When $V_I < 0$ V, diode D_1 is reverse biased and the op-amp is working in the open loop. Therefore, op-amp is no longer capable of keeping $V_n = V_p$.

With no current through resistance R, we have $V_o = 0$. The op-amp output V_o is saturated at V_{sat}.

8.2. Voltage Comparator

The second implementation of the op-amp based circuit is voltage comparator. This type of circuit has many uses in electronics e.g. sensor and actuator management, level detector, etc.

8.2.1. Voltage Comparator

A voltage comparator compares the voltage at one input against the voltage at the other input.

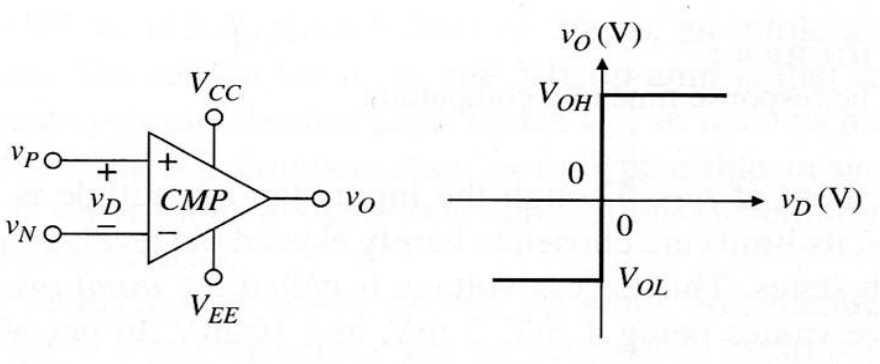

Figure 8.10: Voltage comparator circuit (left) and its voltage transfer curves (right)

The symbol used is the same as an op-amp as an op-amp can be used to make a comparator.

- If $V_P > V_N$ then

$$V_O = V_{OH} \qquad (Eq.2)$$

- If $V_P < V_N$ then

$$V_O = V_{OL} \qquad (Eq.3)$$

Then, considering the voltage transfer curve (VTC) of the comparator, the difference voltage (V_D) at the input is due to:

$$V_D = V_P - V_N \qquad (Eq.4)$$

8.2.2. Response Time

When using an op-amp as a comparator we are relying on the open loop gain to provide the two different output states. These are basically the alternate saturation levels that are close to the op-amp rail voltages.

In general, the op amp is designed to be a linear device, and it is not optimised for rapid rail-to-rail switching. The internal stages have significant parasitic capacitance (or the op-amp has added capacitance to provide stability). This coupled with the fact that the output transistors are saturated results in that significant time is required for the output to change state.

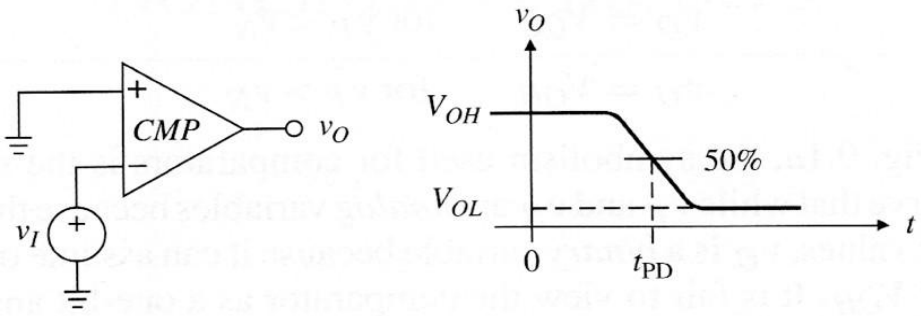

Figure 8.11: Comparator circuit (left) and its transient response (right)

As illustrated in the figure above, the comparator speed is characterised in terms of response time which is often also stated as propagation delay (T_{PD}). Special comparator devices are available with low propagation delays, fast slew rates and digital outputs. One example is the LM311 comparator op-amp which we will look at soon.

8.2.3. Voltage Comparator Applications

One of the most useful applications of a comparator is to detect when an input signal is above or below a set threshold i.e. threshold detector. You could think of it as a 1-bit ADC. If the threshold is set to zero, then we often refer to this as a zero-crossing detector.

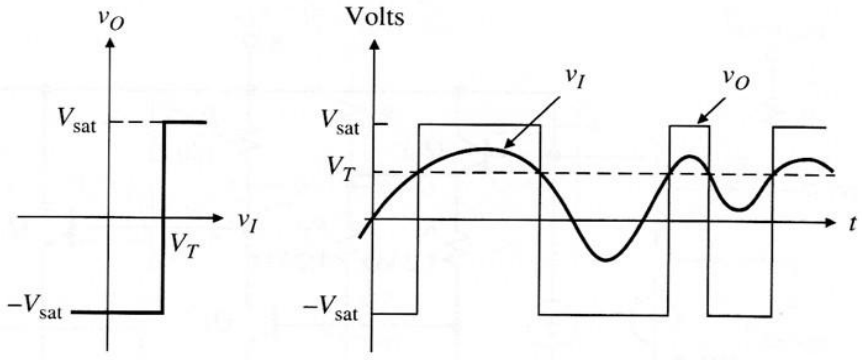

Figure 8.12: Voltage comparator's threshold detector application

Using an op-amp, we are limited to relatively low frequencies due to the significant propagation delays. So, we can only use an op-amp comparator with operating frequency up to audio like signals. Another

issue is that the output is either a large positive or a negative voltage and is therefore not compatible with digital logic.

8.2.4. LM311 Voltage Comparator

LM311 is a type of op amp that is specifically designed for voltage comparator application. The op amp combines the functionalities of an op amp with a power-transistor based switch.

8.2.4.1. LM311 Voltage Comparator

LM311 is a popular voltage comparator that has an open collector transistor as the output stage.

- If $V_P > V_N$, then Q_O (the output transistor) is off.
- If $V_P < V_N$, then Q_O is on.

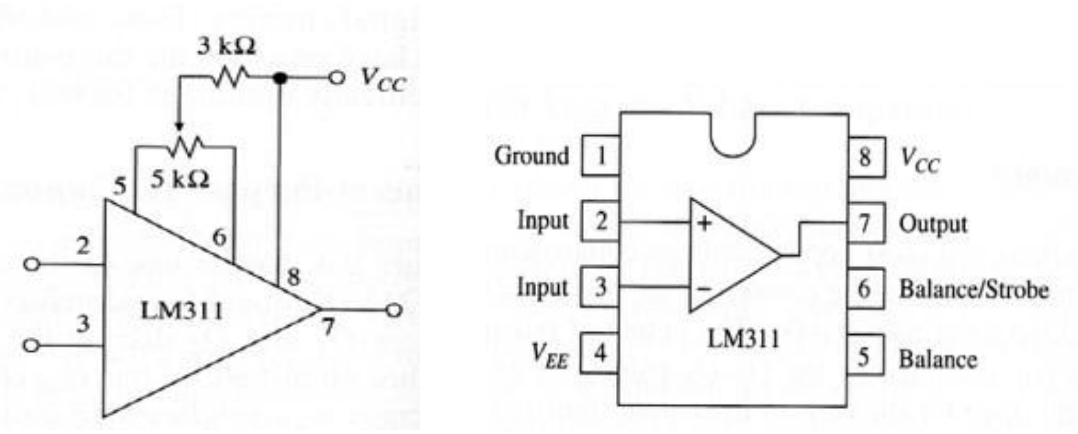

Figure 8.13: Simplified schematic diagram (left) and pin arrangement (right) of LM311 comparator

As the device is not perfect, balance pins are provided to allow offset nulling. Notice that there is a separate "GND" pin associated with the output stage. This pin does not necessarily have to be at GND level. Often the output of the comparator is connected to the input of a logic circuit and therefore the correct logic levels must be generated.

In most situations, this is simply done by connecting V_{EE} to GND and using a pull up resistor between logic V_{CC} and the open collector output. For some other loads, such as those connected to ground, it is possible to connect V_{CC} to the positive supply rail and a load between V_{EE} and ground or a negative supply rail.

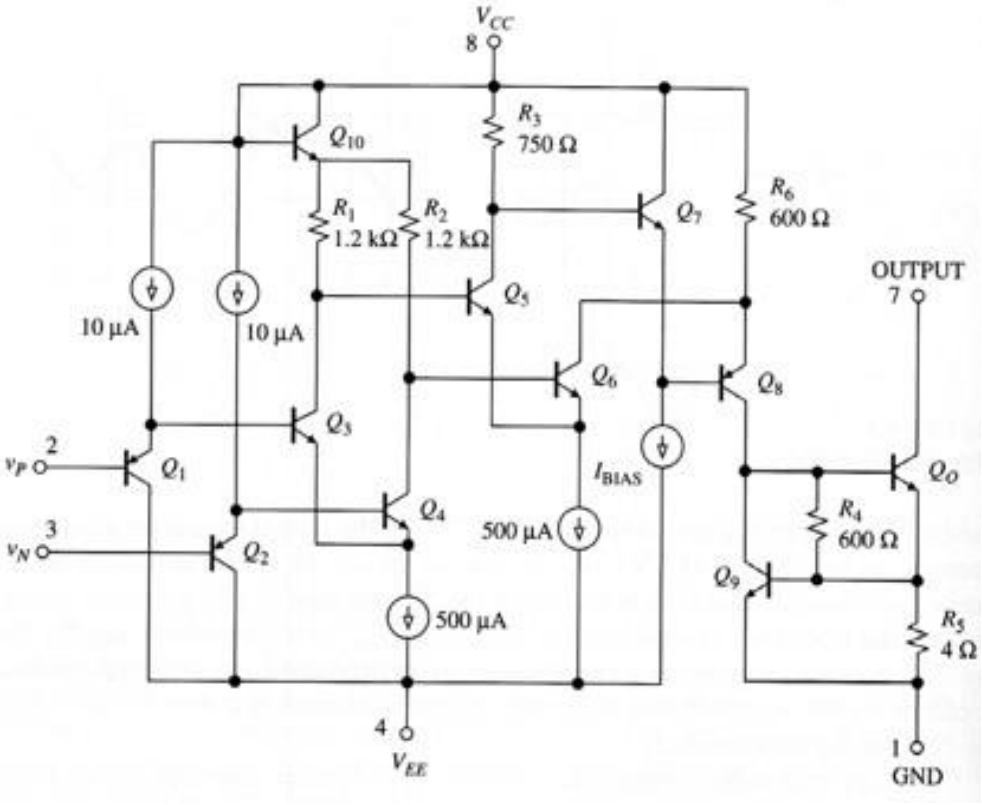

Figure 8.14: Internal schematic layout of LM311 comparator

8.2.4.2. Interfacing to Logic or Other Loads

Examples of ground referenced loads are a thyristor or a bipolar transistor used to control a relay coil.

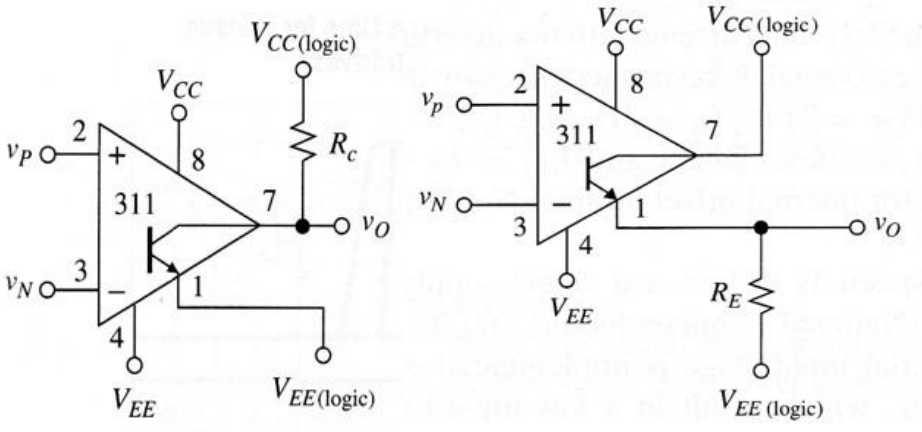

Figure 8.15: Logic interfacing application of LM311 comparator

Note: LM311 output transistor can handle about 50 mA of current so it could be possible to insert a relay coil instead of R_C (e.g. provided that a diode is used for back EMF protection).

8.2.4.3. LM311 Response Time

LM311, being a dedicated comparator device, has a significantly shorter response time compared to an average op-amp.

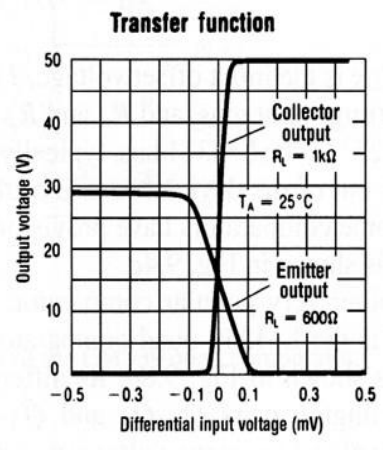

Figure 8.16: Transfer function (Vo/Vi) of LM311 comparator

Overdriving the input helps to speed up the transition and helps in avoiding the situation where the comparator output oscillates between the states due to some noise on the input or the power supplies. We will discuss a way to mitigate oscillation later.

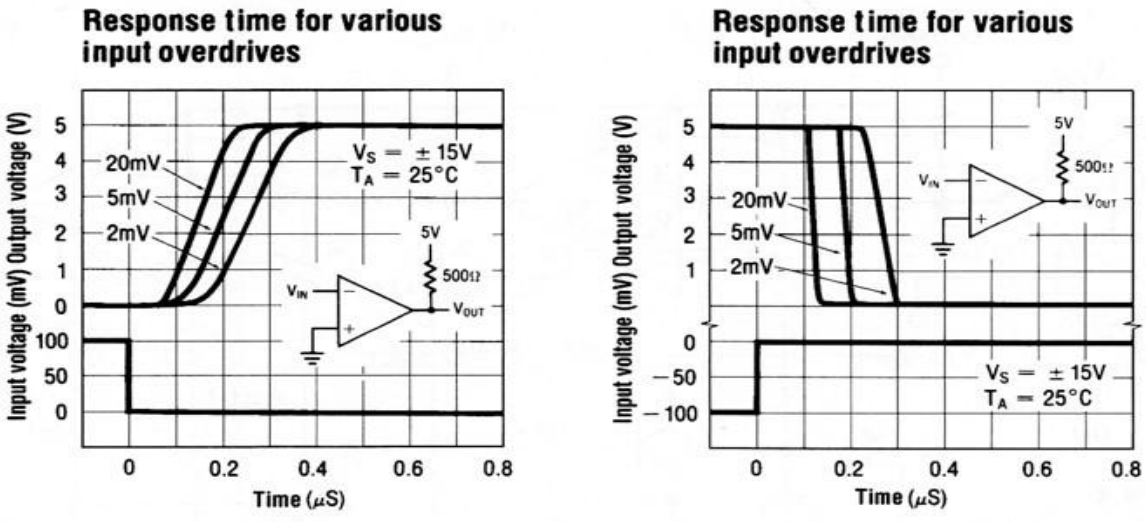

Figure 8.17: Response time of LM311 comparator

8.2.4.4. LM339 Quad Comparator

The LM339 contains four comparators and is a useful device when one is trying to detect several voltage levels. Like LM311, it has an open collector transistor output. However, all the emitters are connected to GND.

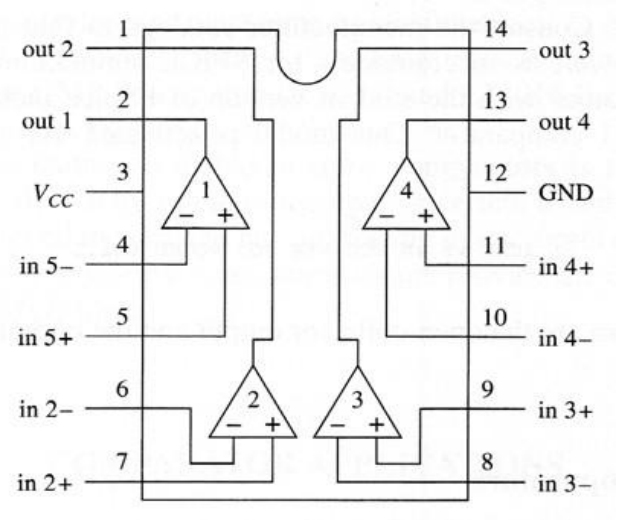

Figure 8.18: Pin arrangement of LM339 quad comparator

The following diagram shows the internal circuit of the LM339 comparator.

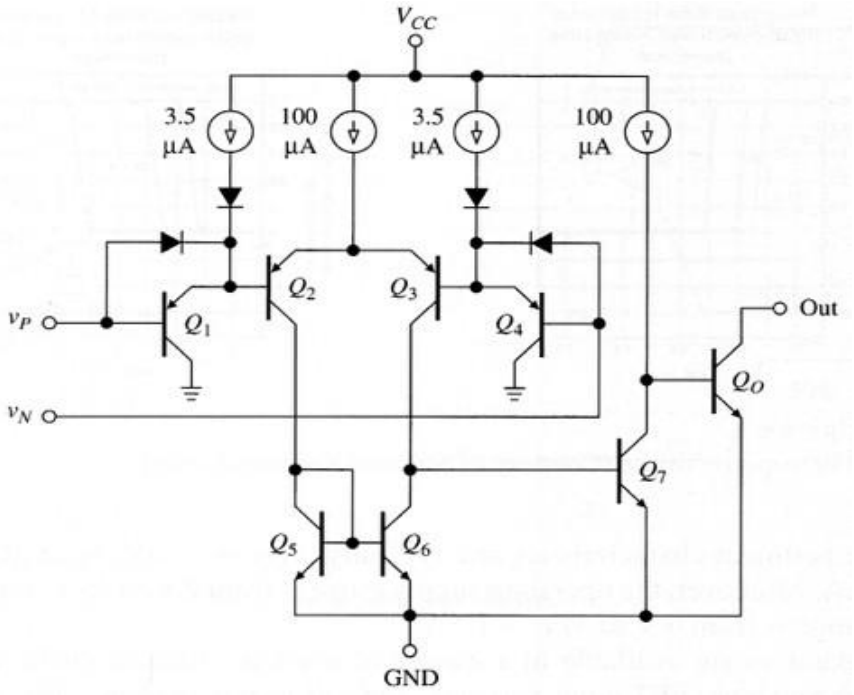

Figure 8.19: Internal schematic layout of LM339 quad comparator

8.2.5. Application of Voltage Comparator

There are four practical applications for voltage comparators that are covered in this section e.g. level detector with LED indicator, on-off temperature controller, voltage window detector and bar graph display.

8.2.5.1. Level Detector with LED Indicator

LED turns on when the voltage on the inverting input is above the reference voltage. Resistors R_1 and R_2 provide input scaling. This circuit could be used as an alarm indicator and a relay used instead of a LED.

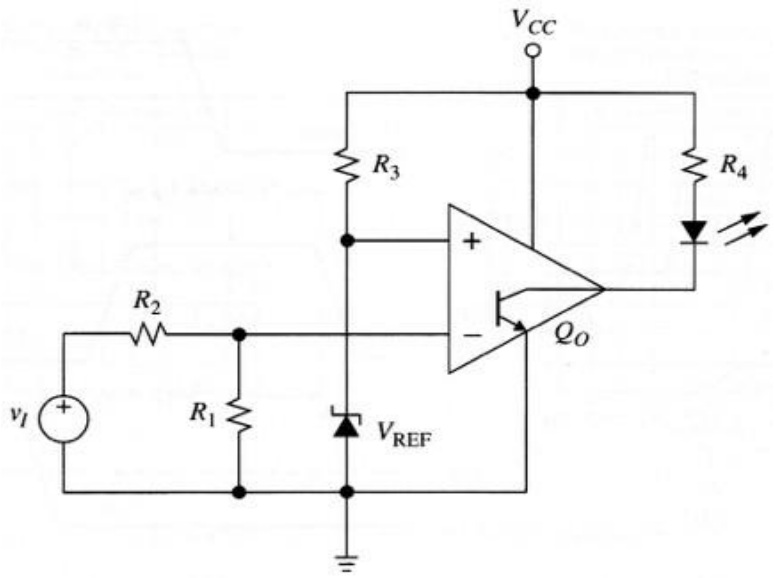

Figure 8.20: Level detector application of voltage comparator

8.2.5.2. On-off Temperature Controller

The output of an LM335 temperature sensor IC is compared to a reference voltage. LM395 power transistor inverts the output so the heater is on when transistor Q_O is off.

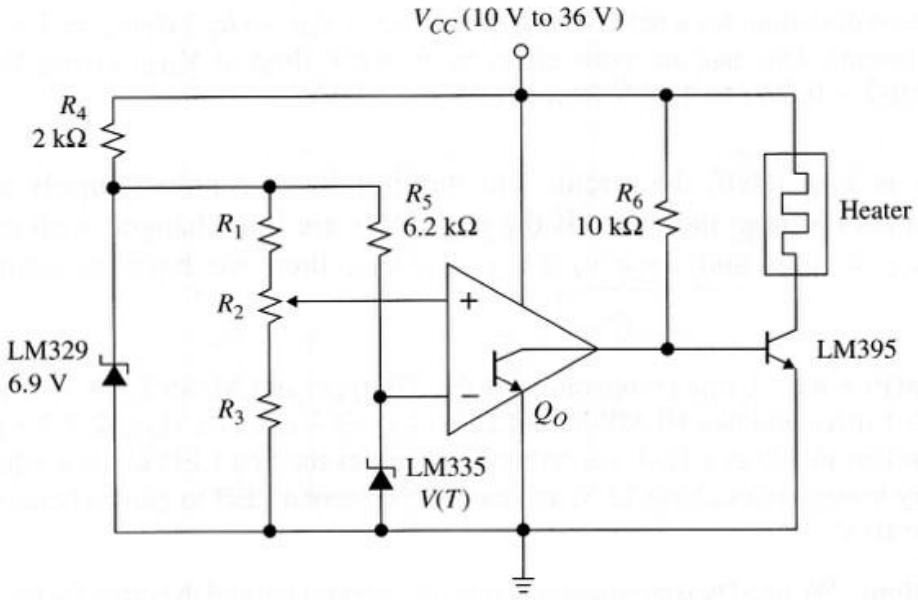

Figure 8.21: On-off temperature application of voltage comparator

8.2.5.3. Voltage Window Detector

It is used to indicate when an input voltage is within a specific range. The range is specified between the values of V_{TL} and V_{TH}.

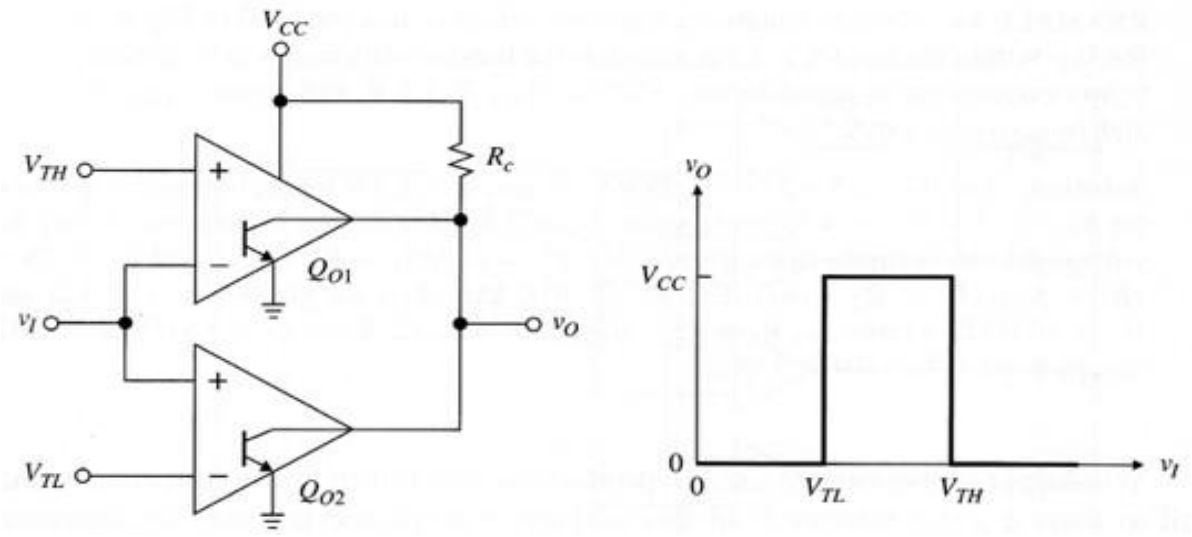

Figure 8.22: Window detector application of voltage comparator

One common application is the monitoring of a specific voltage, such as a power supply rail, to see if it remains within a specified range. For the power supply monitor application as given in the figure below, the LED glows as long as V_{CC} is within specification.

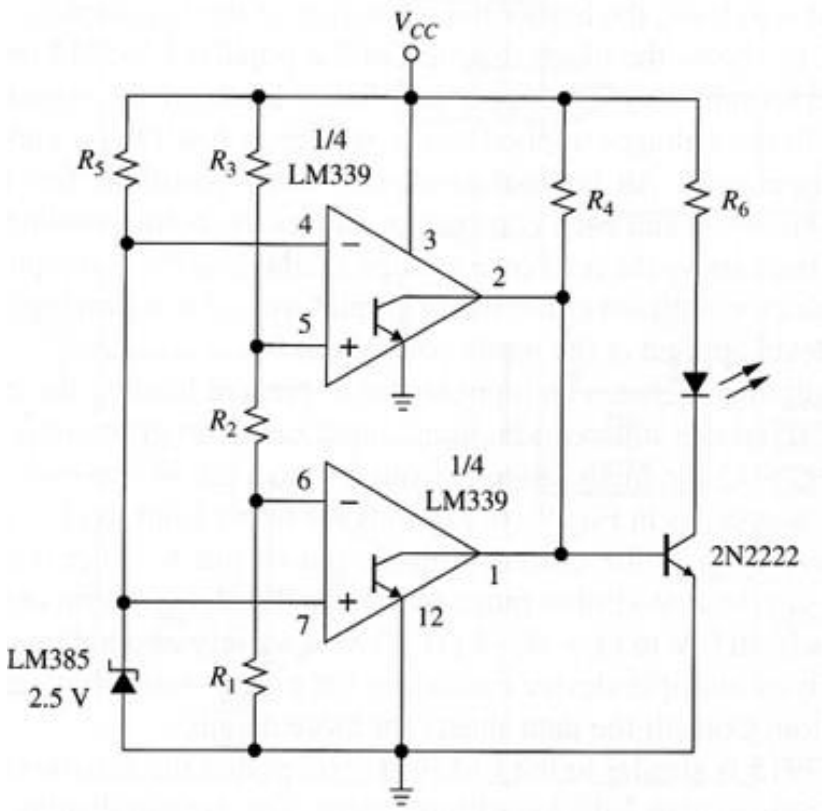

Figure 8.23: Power supply monitor application of voltage comparator

8.2.5.4. Bar Graph Display

It typically can be used to visually represent a signal. It can be easily made with a string of comparators and a voltage divider chain. LM3914 is an IC specifically designed as a voltage level indicator. This is specially used as a visual unit (VU) meter in the audio systems.

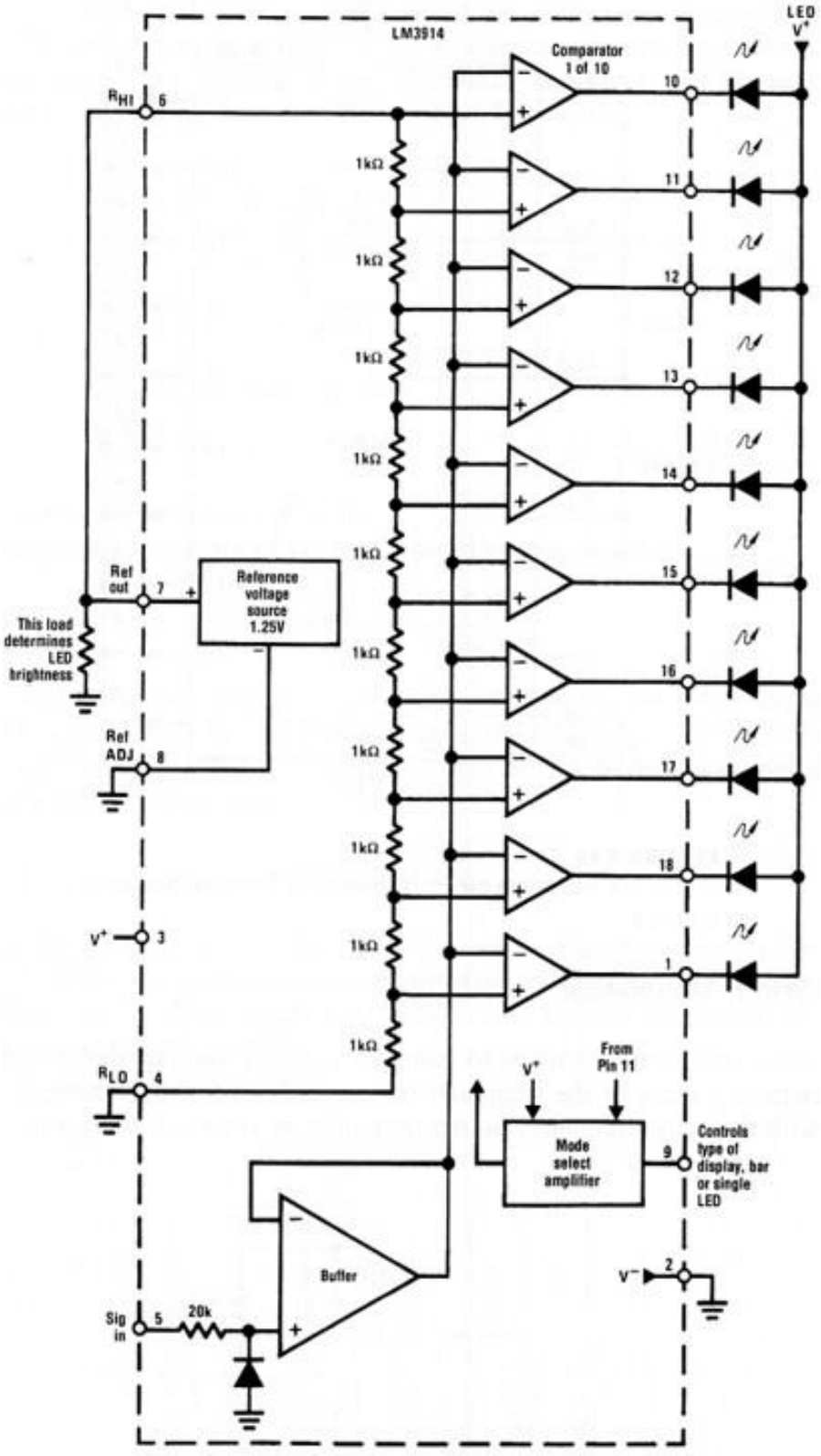

Figure 8.24: The LM3914 dot/bar display driver

LM3914 can operate in bar or dot mode and is available as an integrated module including LEDs.

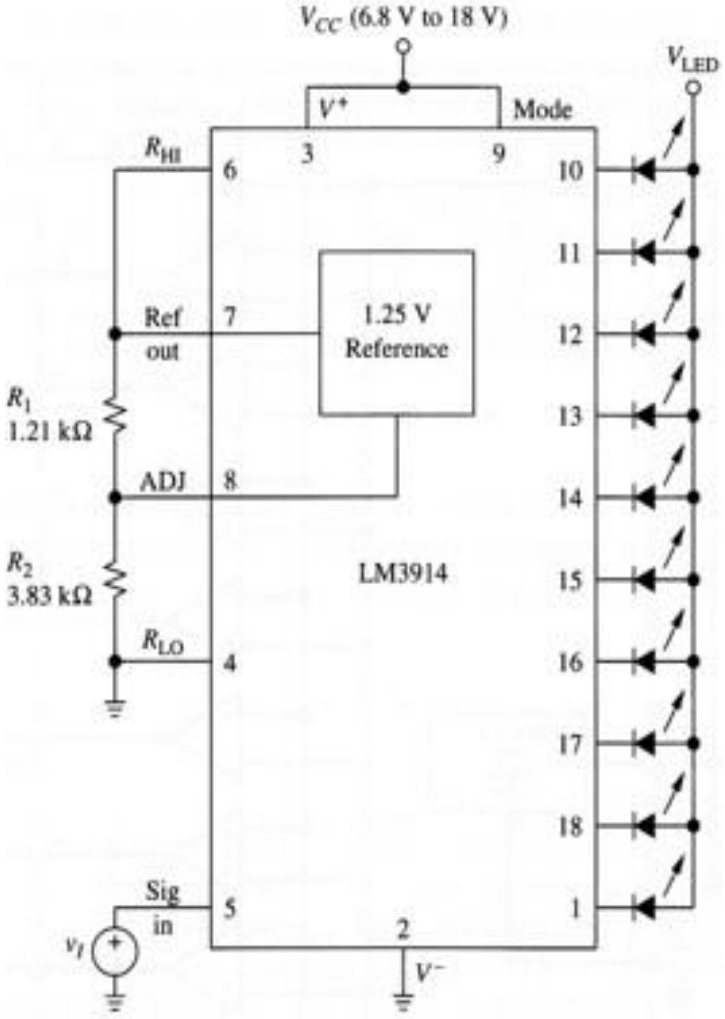

Figure 8.25: Pin arrangement of LM3914 dot/bar display driver

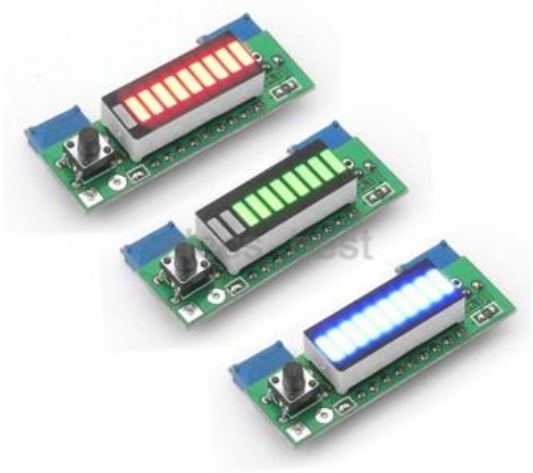

Figure 8.26: Physical layout of bar LED

8.2.6. Schmitt Triggers

Further use of op-amp based comparator circuit is the Schmitt triggers. This type of comparator circuit minimises the weaknesses of general-purpose comparator when working on rapidly fluctuating signal.

8.2.6.1. Schmitt Triggers and Hysteresis

As mentioned before, a potential problem with a comparator is that when the reference and threshold voltages are close there is the possibility of oscillations (chatters) between the two output states. This is especially true when there is noise on the input signal.

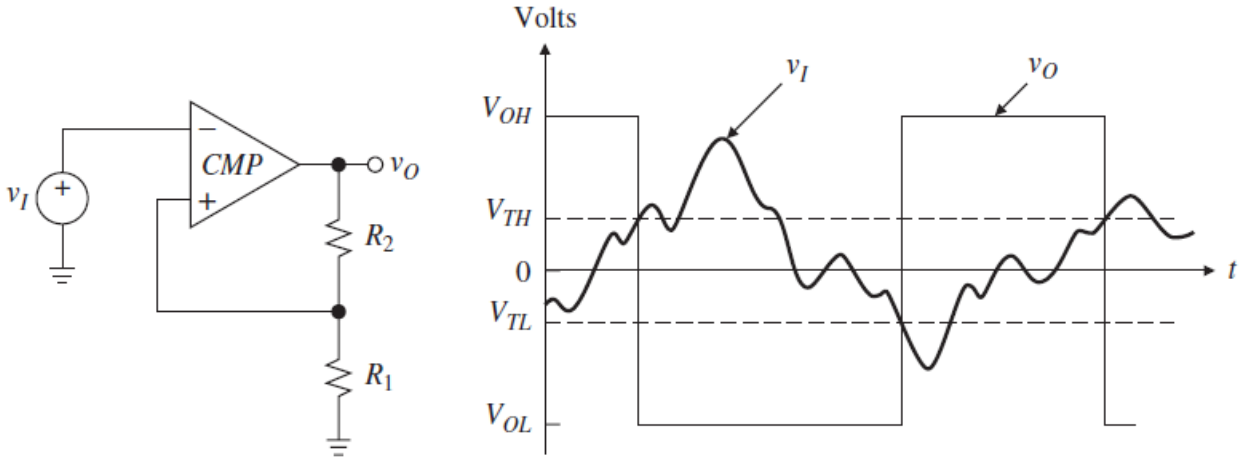

Figure 8.29: Schmitt-trigger circuit and chatters between the two output states

A way to overcome this is to provide hysteresis and this is done by adding positive feedback via resistors as shown in the figure given above.

8.2.6.2. Inverting Schmitt Trigger

The circuit given in the figure below uses a voltage divider to provide positive feedback around the op-amp. It is an inverting type of threshold detector with the threshold controlled by the output voltage and the resistors.

If the output is positive, due to the input being negative, then the threshold voltage for a positive to negative output transition will be $V_{TH} = 5/13 \times V_{OH}$. If V_{OH} is 13 V, then the high threshold (V_{TH}) will be +5 V. Likewise low threshold (V_{TL}) will be -5 V.

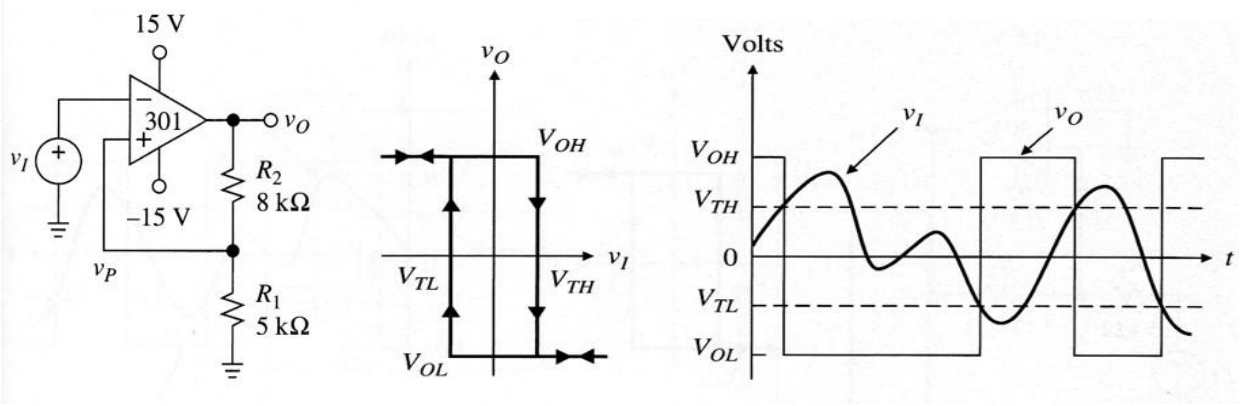

Figure 8.30: Quadrant of operation (left), VTC (centre) and transient response (right) of Schmitt trigger

The Schmitt trigger was initially implemented using thermionic valves. The hysteresis width is defined as the difference between the two thresholds:

$$\Delta V_T = V_{TH} - V_{TL} \qquad (Eq. 5)$$

The threshold voltage equation of the Schmitt trigger is:

$$\Delta V_T = \left(\frac{R_1}{R_1 + R_2}\right)(V_{OH} - V_{OL}) \qquad (Eq. 6)$$

Adding hysteresis is useful in eliminating chatter from slowly varying signals, especially when there is also some noise. Another application is on/off controllers e.g. temperature controllers or pump controllers trying to maintain a specific value. Adding hysteresis will also avoid over frequent cycling.

8.2.6.3. Non-Inverting Schmitt Trigger

The non-inverting Schmitt trigger circuit is a shown in the figure below. Notice that its voltage transfer curve (VTC) is counterclockwise compared with the VTC of inverting Schmitt trigger circuit.

V_I is now applied at the non-inverting input. If the output voltage is initially negative (due to V_i previously being very negative), then for the output to change to positive, we must apply an input voltage (V_{TH}) that will cause V_P to become slightly larger than V_N.

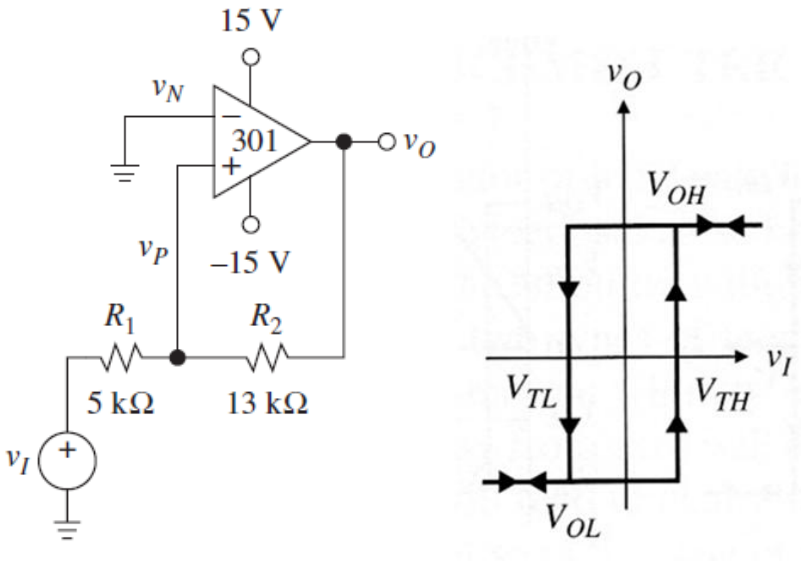

Figure 8.31: Non-inverting Schmitt trigger circuit (left) and its quadrant of operation (right)

For $V_I \ll 0$, the output will saturate at V_{OL}. If we want V_o to switch state, we must raise V_I to a high enough value to bring V_P to cross $V_N = 0$, since this is when the comparator trips. This value of V_I , aptly denoted as V_{TH}, must be such that:

$$\frac{V_{TH} - 0}{R_1} = \frac{0 - V_{OL}}{R_2} \qquad (Eq. 7)$$

Or

$$V_{TH} = -\left(\frac{R_1}{R_2}\right) V_{OL} \qquad (Eq. 8)$$

The transient response of the non-inverting Schmitt trigger circuit is as shown in the figure below.

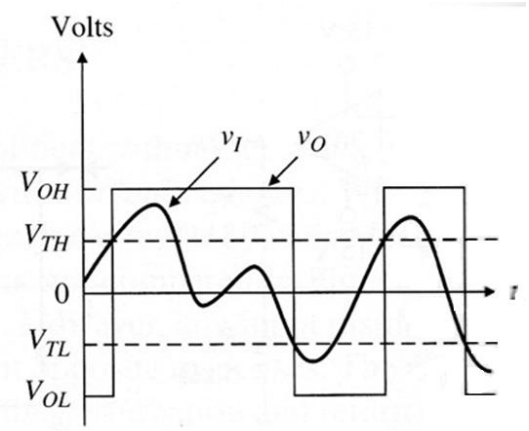

Figure 8.32: Transient response of non-inverting Schmitt trigger

Once V_o has snapped to V_{OH}, V_I must be lowered if we want V_O to snap back to V_{OL}. The tripping voltage V_{TL} is such that:

$$\frac{V_{OH} - 0}{R_2} = \frac{0 - V_{TL}}{R_1} \qquad (Eq. 9)$$

Or

$$V_{TL} = -\left(\frac{R_1}{R_2}\right) V_{OH} \qquad (Eq. 10)$$

The hysteresis width of the non-inverting Schmitt trigger is:

$$\Delta V_T = \left(\frac{R_1}{R_2}\right)(V_{OH} - V_{OL}) \qquad (Eq. 11)$$

Non-inverting Schmitt trigger appeal any applications that require non-inversion (in-phase) circuit.

8.2.6.4. Single-Supply Schmitt Triggers

As we are often interfacing with logic it usually desirable to have a single-supply solution.

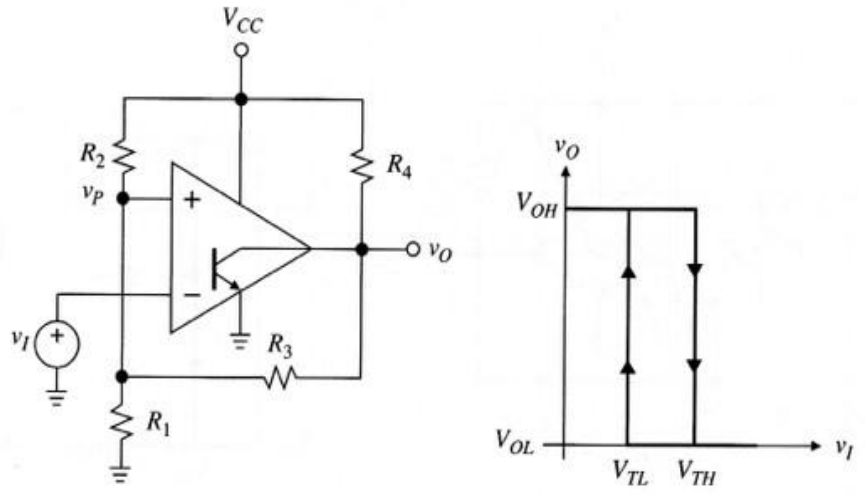

Figure 8.33: Single-supply inverting Schmitt trigger circuit (left) and its quadrant of operation (right)

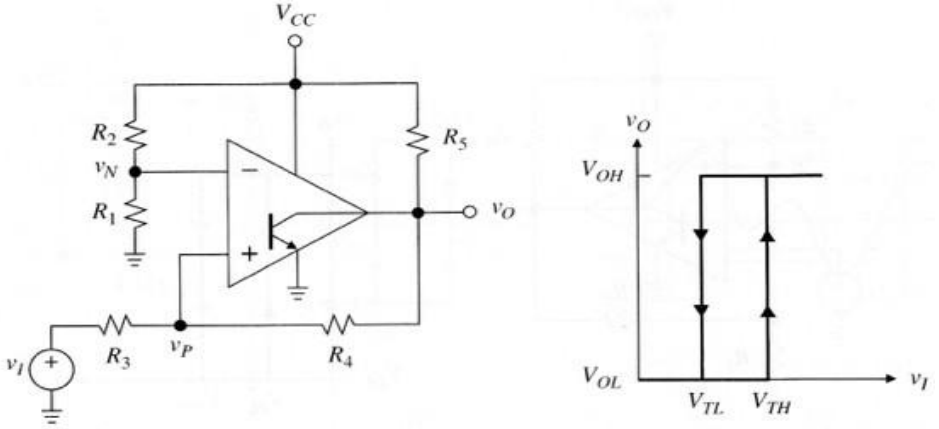

Figure 8.34: Single-supply noninverting Schmitt trigger circuit (left) and its quadrant of operation (right)

As shown above the hysteresis operates in the first quadrant mode. Both Schmitt trigger circuits do not need positive and negative supplies, as the negative supply is connected to the GND.

Example for Tutorial 2 – Comparator Circuit

In the comparator circuit of figure given below, let V_{ref} = 2.0 V, R_1 = 20 kΩ, and R_2 = 30 kΩ. Assume that U1 is a LM339 comparator with V_{OS} = 5 mV (maximum) and I_B = 250 nA (maximum) from its datasheet.

a. Determine the value of input voltage (V_I) that will turn on the LED. [5 marks]

b. Calculate observed base voltage at the input of the comparator circuit due to the bias current. [5 marks]

c. Calculate the offset voltage of the comparator circuit for worst-case condition of the circuit.

[5 marks]

d. Estimate the worst-case error of your circuit. [5 marks]

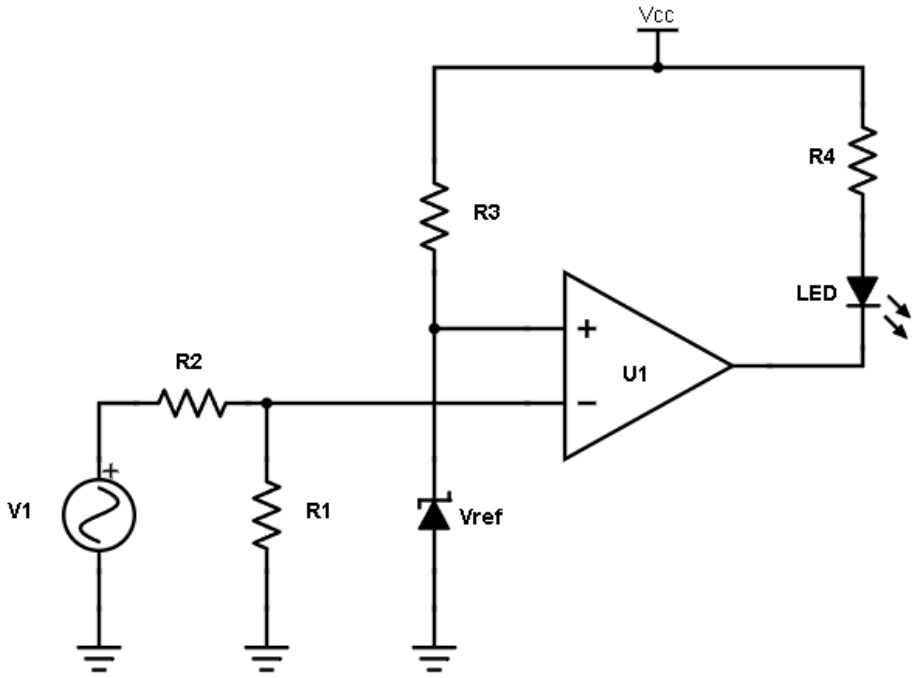

Solution

a. The value of input voltage (V_1) that will turn on the LED is found as follows. Knowing that virtual zero at op amp inputs (V_p and V_n):

$$V_p = V_n$$

The output voltage when the comparator is about to trip is found from the following equation

$$V_1\left(\frac{R_1}{R_1 + R_2}\right) = V_{\text{ref}}$$

Rearranging the equation given above:

$$V_1 = \left(\frac{R_1 + R_2}{R_1}\right) V_{\text{ref}}$$

Put the relevant values into the above equation, the input voltage is:

$$V_1 = \left(\frac{20\ \text{k}\Omega + 30\ \text{k}\Omega}{20\ \text{k}\Omega}\right)(2\ \text{V}) = 5\ \text{V}$$

b. In this circuit, I_P has no effect because $R_p \cong 0$, so, the bias current (I_B) does not determine the error of this input of the comparator.

Since I_N flows out of the comparator, it raises the inverting-input voltage by:

$$V_{B(I_N)} = (R_1 \parallel R_2)I_N$$
$$= \left[\frac{(20\ \text{k}\Omega)(30\ \text{k}\Omega)}{20\ \text{k}\Omega + 30\ \text{k}\Omega}\right](250\ \text{nA}) = 3\ \text{mV}$$

This maximum value is when the comparator is about to trip.

c. The worst-case scenario occurs when V_{OS} adds in the same direction, for a net inverting-input rise of:

$$V_{OS} + (R_1 \parallel R_2)I_N = 5\ \text{mV} + 3\ \text{mV} = 8\ \text{mV (maximum)}$$

This has the same effect as an 8-mV drop in V_{REF}, giving:

$$V_o = \left(1 + \frac{30\ \text{k}\Omega}{20\ \text{k}\Omega}\right)(2\ \text{V} - 0.008\ \text{V}) = 4.98\ \text{V}$$

So, this is the value of output voltage in the circuit, instead of $V_o = 5.00\ \text{V}$.

d. As a result, the worst-case error of the circuit is:

$$\%\ \text{error} = \left(\frac{5\ \text{V} - 4.98\ \text{V}}{5\ \text{V}}\right) \times 100\% = 0.4\%$$

8.3. Oscillators

The third practical implementation of op-amp based circuit is oscillator application. In general, an oscillator produces undamped oscillations.

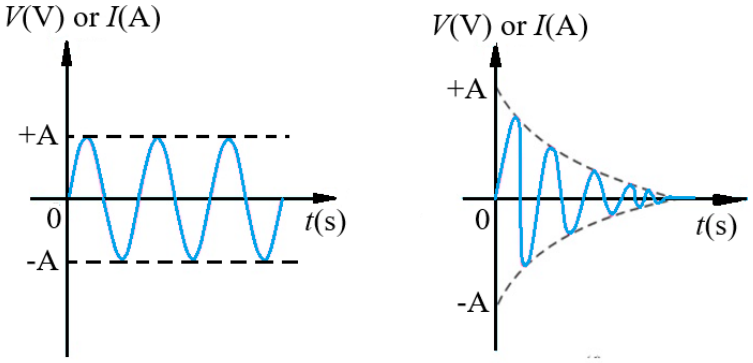

Figure 8.35: Examples of undamped (left) and damped (right) waveforms

Electrical systems are mostly lossy, as a result the system exhibits a damped response. So, you need constant energy supply to overcome the losses that is the principle of oscillator design.

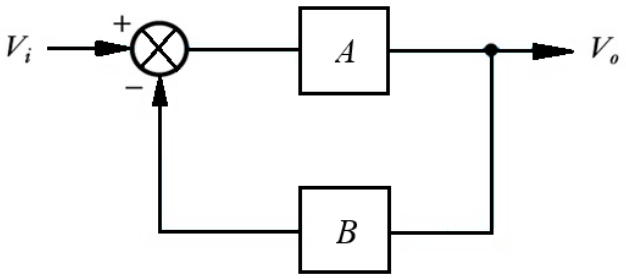

Figure 8.36: Block diagram of a feedback system

For a generalised feedback system, the closed-loop gain G of this system:

$$G = \frac{A}{1 + AB} \qquad (Eq. 12)$$

8.3.1. Barkhausen Criterion

Looking at the expression for feedback system:

$$G = \frac{A}{1 + AB} \qquad (Eq. 13)$$

We note that when $AB = -1$, $|AB| = 1$ with phase angle of 180°, the gain is infinite e.g. this represents the condition for oscillation. The requirements for oscillation are described by the Barkhausen criterion:

- The magnitude of the loop gain AB must be 1.
- The phase shift of the loop gain AB must be 360°.

8.3.2. Wien-Bridge Oscillators

As shown in the figure below, the Wien-Bridge oscillator is a lead-lag circuit. Resistor R_1 and capacitor C_1 form the lag portion and then resistor R_2 and capacitor C_2 form the lead portion.

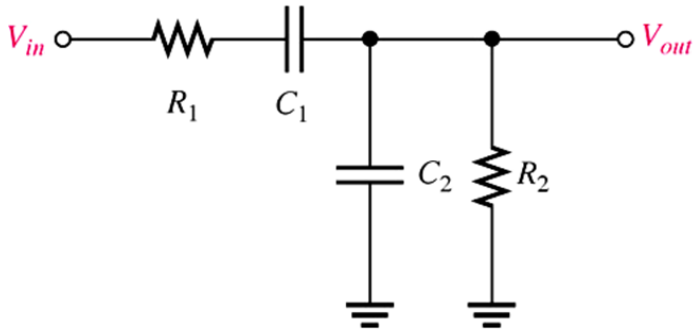

Figure 8.37: Wien-Bridge oscillator circuit

At lower frequencies, the lead circuit dominates due to the high reactance of C_2. As the frequencies increases, reactance of the C_2 decreases, thus allowing the output voltage to increase.

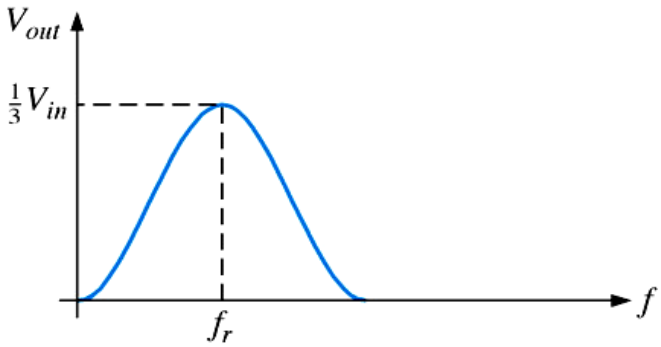

Figure 8.38: Resonant peak of Wien-Bridge oscillator circuit

The resonant frequency can be determined by the formula below:

$$f_r = \frac{1}{2\pi RC} \qquad (Eq.14)$$

The transient waveform fluctuates at this frequency (f_r). Below f_r, the lead circuit dominates and the output leads the input. Above f_r, the lag circuit dominates and the output lags the input.

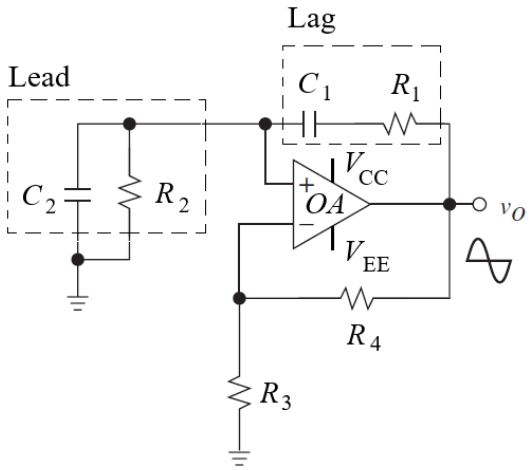

Figure 8.39: Lead-lag parts of the Wien-Bridge oscillator circuit

8.3.3. Analysis of Oscillator

The Wien-Bridge uses two RC networks to produce the required phase shift. The example oscillator circuit uses a single supply op-amp with V_{CC} = +5 V and V_{EE} = GND. It is intended that the oscillator

circuit oscillates between 0 and 5 V. The oscillator would vary symmetrically about zero as the circuit is powered with 5 V single supply. Note the use of both positive and negative feedback.

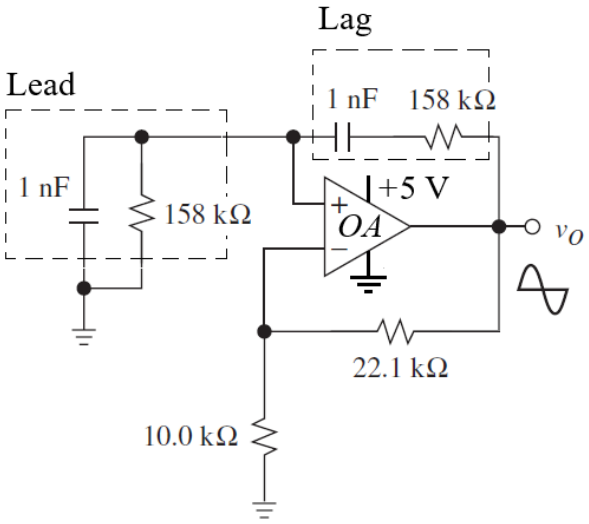

Figure 8.40: Wien-Bridge oscillator circuit

To determine feedback gain (β) to the non-inverting terminal of the op amp, upper pair set is R_1 and C_1 and lower pair set is R_2 and C_2.

$$\beta = \frac{X_{C2}R_2}{X_{C2}R_2 + X_{C1} + R_1}$$

$$= \frac{\frac{R_2}{1 + sR_2C_2}}{\frac{R_2}{1 + sR_2C_2} + \frac{1}{sC_1} + R_1} \qquad (Eq.15)$$

Thus, the feedback gain becomes:

$$\beta = \frac{1}{1 + \frac{R_1}{R_2} + sR_1C_2 + \frac{1}{sC_1R_2} + C_2/C_1} \qquad (Eq.16)$$

To have a phase shift of zero, we have $R_1 = R_2 = R$ and $C_1 = C_2 = C$.

$$\beta = \frac{1}{1 + \frac{R}{R} + sRC + \frac{1}{sRC} + C/C}$$

$$= \frac{1}{3 + sRC + \frac{1}{sRC}} \qquad (Eq.17)$$

This happens at $s = j\omega = j/RC$, we obtain:

$$\beta = \frac{1}{3 + j - j} = \frac{1}{3} \qquad (Eq.18)$$

Thus, the loop gain of oscillator circuit (G) is found from:

$$G = a\beta = a\left(\frac{1}{3}\right) = \frac{a}{3} \qquad (Eq.19)$$

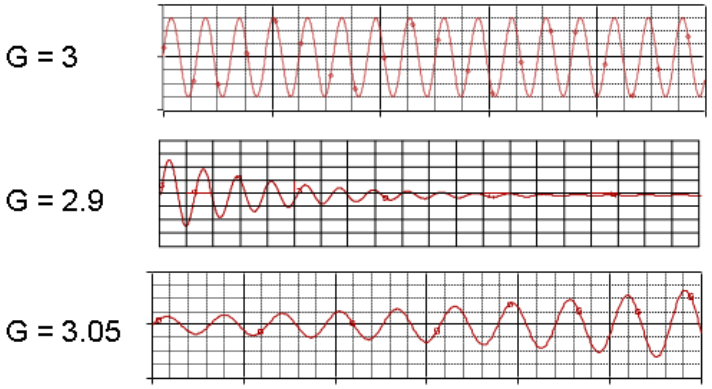

Figure 8.41: Transient response of Wien-Bridge oscillator near resonant frequency

If G = 3, constant amplitude oscillations. If G < 3, oscillations attenuate. If G > 3, oscillations amplify.

8.3.4. Making the Oscillations Steady

The feedback fraction at f_r in this circuit is 1/3, thus A must be > 3 for oscillations to start. After that, A must reduce to avoid driving the op amp to V_{sat}.

$$A = 1 + \frac{R_4}{R_3} \qquad (Eq.20)$$

If $R_4 = 2R_3$, then the gain of feedback loop (β) becomes:

$$\beta = \frac{V_{in}}{V_{out}} = \frac{1}{A} = \frac{1}{3} \qquad (Eq.21)$$

One solution for avoiding saturation is a positive temperature coefficient device i.e. R_3 to decrease gain.

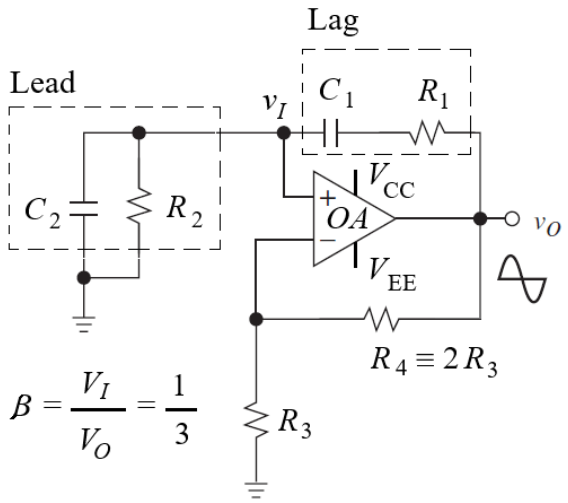

Figure 8.42: Components determination of the Wien-Bridge oscillator

One solution is a positive temperature coefficient device i.e. R_3 to decrease gain. Add a diode network to keep circuit around G = 3. If G = 3, diodes are off.

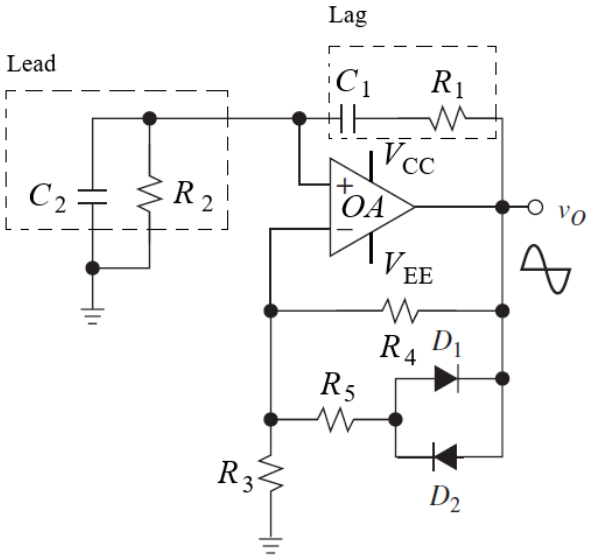

Figure 8.43: Wien-Bridge oscillator circuit with added compensation components

When output voltage is positive, D_1 turns on and R_5 is switched in parallel causing G to drop. When output voltage is negative, D_2 turns on and R_5 is switched in parallel causing G to drop.

With the use of diodes, the non-ideal op-amp can produce steady oscillations. But it acquires increased distortion as shown in the graph below. From the graph, it seems that the distortions are modulated by a lower frequency sinusoidal signal.

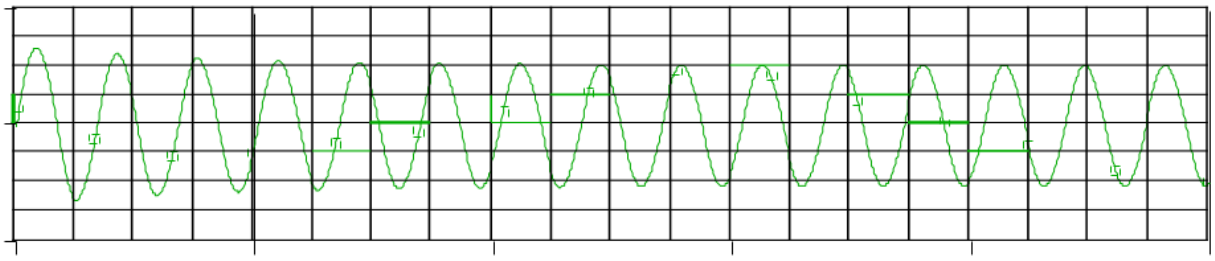

Figure 8.44: Transient response of Wien-Bridge oscillator with some distortions

8.3.5. Phase Shift Oscillator

When common-emitter amplifiers are used as oscillators, the feedback circuit must provide a 180° phase shift to make the circuit oscillate.

$$G(s) = \frac{A}{1 + (A)(\beta)} \qquad (Eq. 22)$$

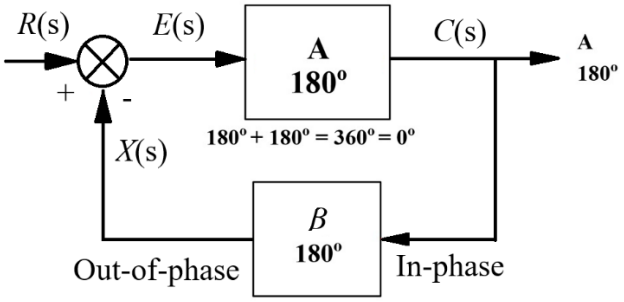

Figure 8.44: Block diagram of a phase-shift mechanism in the oscillator circuit

The phase shift introduced in the oscillator circuit is because of the reactive components, such as capacitor and induction. The simplest phase-shift circuits consist of four terminal networks containing either a reactive component, either L or C and a resistor, or two opposing reactive components such as LC.

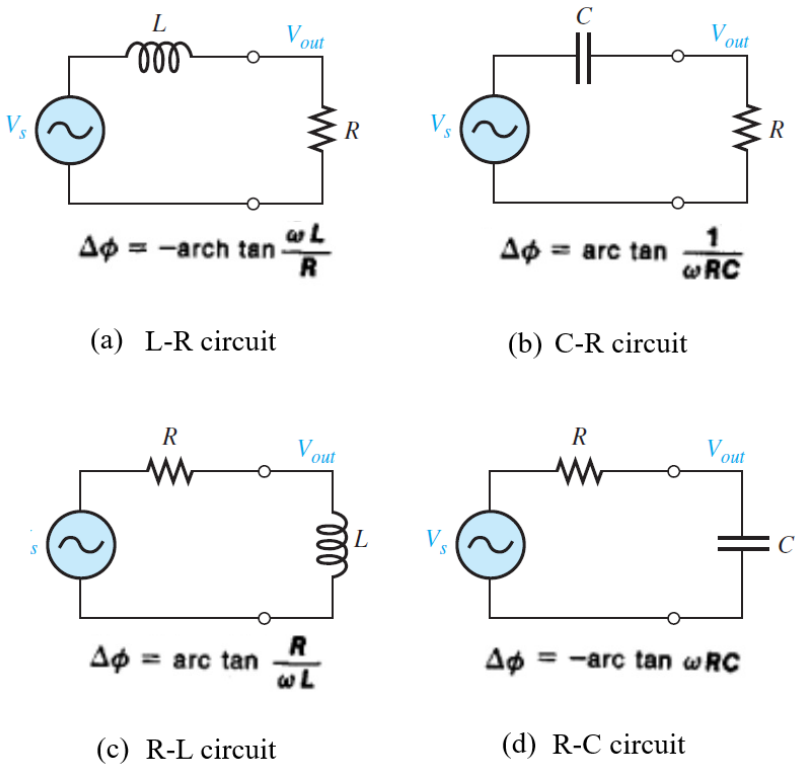

Figure 8.45: Circuits with phase shift

The phase shift graph of the oscillator for various RC sections is shown below.

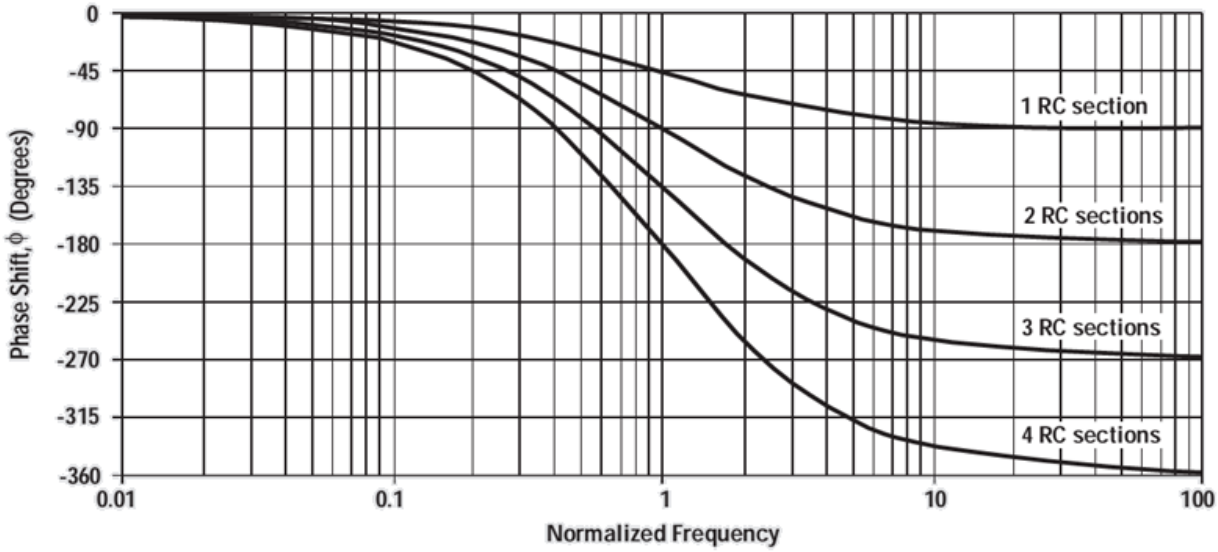

Figure 8.46: Phase plot of phase shift oscillator with various values of RC

From the graph, the phase shift for the 1 RC section is to settle to -π/2, the 2 RC section is -π, the 3 RC section is -3π/2, and the 4 RC section is -2π.

8.3.6. Single-Amplifier Phase-Shift Oscillator

A single amplifier phase-shift oscillator as shown in the figure below is less distortion from Wien-Bridge. This occurs when output distortion is very low e.g. -0.46 %, although this design is less popular these days. The three RC sections are cascaded to get the steep slope between phase and resonant frequency. With three RC sections, the angle for each section is -π/3.

$$\omega = 2\pi f = \frac{\sqrt{3}}{RC} \qquad \left(\text{e.g.}\tan 60° = \sqrt{3}\right) \qquad (Eq.23)$$

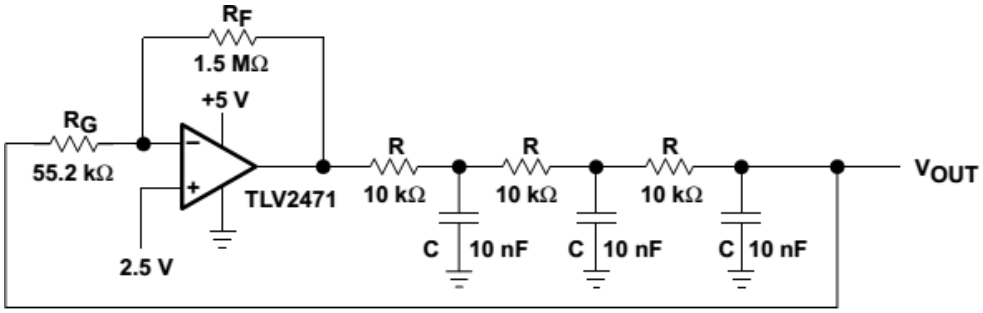

Figure 8.47: Single-amplifier phase shift oscillator circuit

Assume the RC stages do not load each other:

$$\beta = \left(\frac{1}{sRC + 1}\right)^3 \qquad (Eq.24)$$

With $s = j\omega$, the magnitude of frequency response at oscillation frequency is:

$$|\beta|_{s=\frac{j\sqrt{3}}{RC}} = \left[\frac{1}{\left(\frac{j\sqrt{3}}{RC}\right)RC + 1}\right]^3$$

$$= \left(\frac{1}{\sqrt{\left(\sqrt{3}\right)^2 + (1)^2}}\right)^3 = \frac{1}{8} \qquad (Eq.25)$$

And phase shift is:

$$\angle\beta_{s=\frac{j\sqrt{3}}{RC}} = -\tan^{-1}\left[\frac{\left(\frac{j\sqrt{3}}{RC}\right)RC}{1}\right] = 60° \qquad (Eq.26)$$

The three RC stages have a cumulative gain of 1/8. So, to satisfy the Barkhausen criterion, the gain of the oscillator A = 8. In practice, a gain significantly higher than 8 is required for the oscillation (e.g. R_f/R_g = 27).

8.3.7. Buffered Phase Shift Oscillator

The loading effects of the RC chain upset the calculation of oscillation frequency. To eliminate the effects, voltage followers are used to isolate various RC stages.

Typically, a quad op amp is used, with final stage to buffer V_{out} before it is passed to load as shown in the circuit in the figure below.

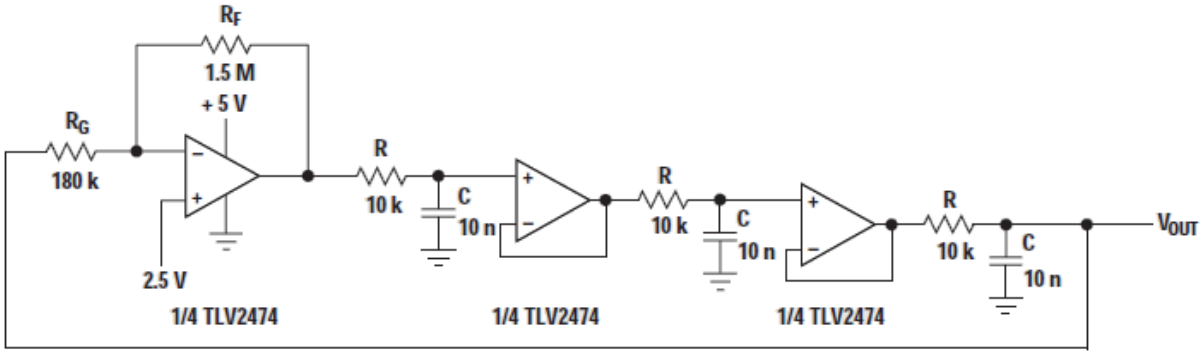

Figure 8.48: Buffered phase shift oscillator circuit

As shown in the diagram above, each RC stage is separated from the other by a voltage follower/buffer circuit. This would likely to eliminate the loading effect between each RC stage.

8.3.8. The Bubba Oscillator

This Bubba oscillator circuit as shown in the figure below uses four RC stages e.g. each RC stage contributes to -π/4 or 45° of phase shift at the oscillation frequency.

The frequency of the oscillation of the Bubba oscillator is:

$$\omega = 2\pi f = \frac{1}{RC} \qquad (\text{e.g. } \tan 45° = 1) \qquad (Eq.27)$$

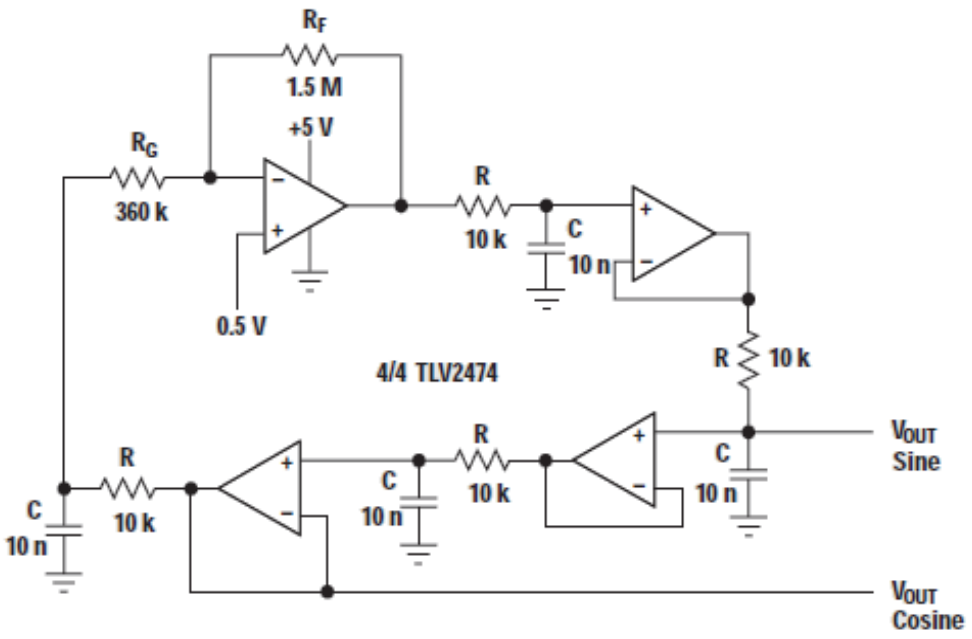

Figure 8.49: Bubba oscillator circuit

Each RC section has a gain of $1/\sqrt{2}$. So, four RC sections will give a cumulative gain of 1/4. So, system gain of 4 to satisfy the Barkhausen criterion.

$$A\beta = A\left(\frac{1}{RCs+1}\right)^4 \qquad (Eq.28)$$

With $s = j\omega$, its feedback loop gain is:

$$|\beta|_{s=\frac{j}{RC}} = \left[\frac{1}{(RC)s+1}\right]^4 = \left(\frac{1}{\sqrt{2}}\right)^4 = \frac{1}{4} \qquad (Eq.29)$$

The phase shift is:

$$\angle\beta_{s=\frac{j}{RC}} = -\tan^{-1}\left[\frac{(RC)s}{1}\right] = -45° \qquad (Eq.30)$$

It produces sine and cosine outputs that are useful for modulation and demodulation.

8.3.9. The Quadrature Oscillator

As shown in the figure below, like Bubba oscillator, this quadrature oscillator also generates sine and cosine outputs.

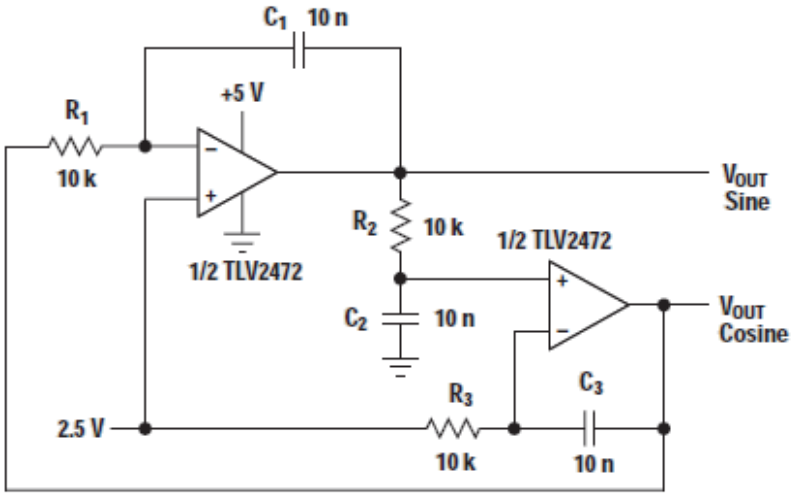

Figure 8.50: Quadrature oscillator circuit

The circuit is realised with only two op amps and consists of an inverting op amp-based RC part, an RC circuit part, and a non-inverting op amp-based RC part. Each part contributes π/2 or 90° phase shift, thus the sine and cosine outputs (i.e. perpendicular or quadrature to each other).

The feedback loop gain of this oscillator is:

$$\beta = \left(\frac{1/sC_1}{R_1}\right)\left(\frac{1/sC_2}{(R_2 + 1/sC_2)}\right)\left(\frac{1/sC_3}{R_3} + 1\right)$$

$$= \left(\frac{1}{sR_1C_1}\right)\left(\frac{sR_3C_3 + 1}{sR_3C_3(sR_2C_2 + 1)}\right) \qquad (Eq.31)$$

If R's and C's components are equal, then the feedback loop gain becomes:

$$\beta = \left(\frac{1}{sRC}\right)\left(\frac{1}{sRC}\right) = \left(\frac{1}{sRC}\right)^2 \qquad (Eq.32)$$

Example for Tutorial 3 – Oscillator Circuit

Given in the figure below is a single amplifier phase-shift oscillator circuit.

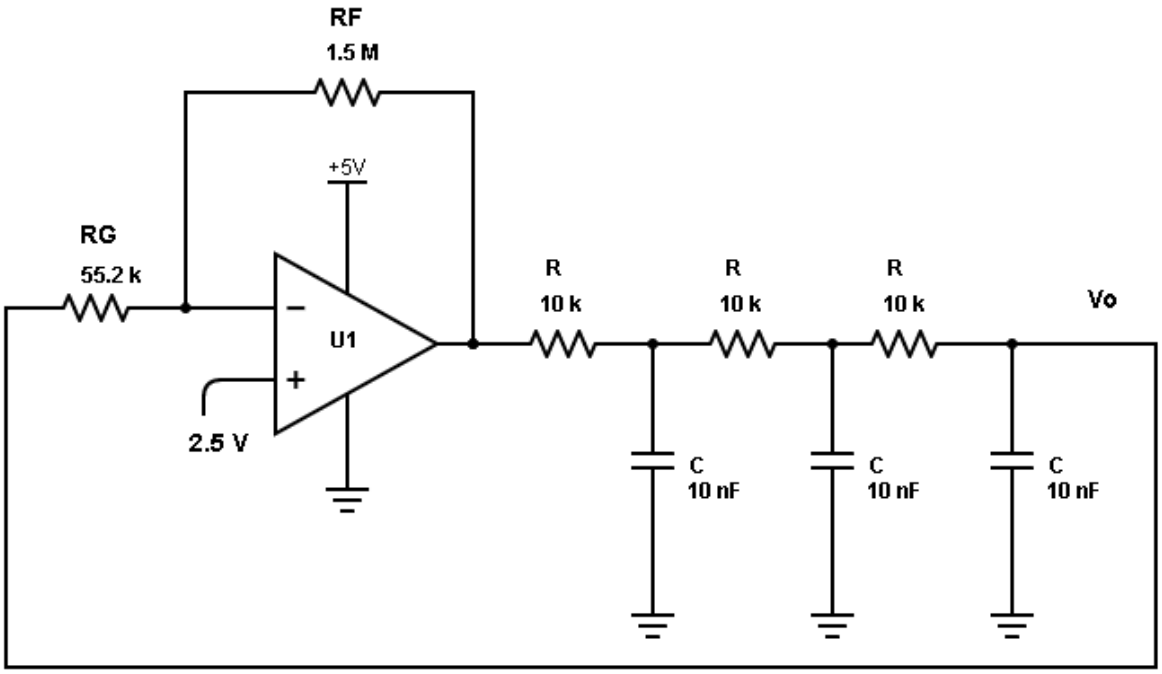

a. What is the phase shift for each of the RC sections in the oscillator? [2 marks]

b. Determine the frequency of oscillation. [4 marks]

c. Determine the cumulative gain of feedback loop of the circuit. [4 marks]

d. Determine the overall gain for the above oscillator circuit. [4 marks]

e. Describe how you set up the gain of the circuit in practice. [2 marks]

Solution

a. The three RC sections of the oscillator are cascaded to get the steep slope between phase and resonant frequency. With the three RC sections, the angle for each section is -π/3 rad/s or 60°.

$$\omega = 2\pi f = \frac{\sqrt{3}}{RC} \qquad \left(\text{e.g. } \tan 60° = \sqrt{3}\right)$$

b. The frequency of the oscillation of the given oscillator circuit is:

$$f = \frac{\sqrt{3}}{2\pi RC} = \frac{\sqrt{3}}{2\pi(10 \times 10^{3})(10 \times 10^{-9})} = 2.76 \text{ kHz}$$

c. If the RC stages do not load each other, the gain of feedback loop is:

$$\beta = \left(\frac{1}{sRC+1}\right)^3$$

With $s = j\omega$, the magnitude of frequency response at oscillation frequency is:

$$|\beta|_{s=\frac{j\sqrt{3}}{RC}} = \left[\frac{1}{\left(\frac{j\sqrt{3}}{RC}\right)RC+1}\right]^3 = \left(\frac{1}{\sqrt{\left(\sqrt{3}\right)^2+(1)^2}}\right)^3 = \frac{1}{8}$$

The three RC stages have a cumulative gain of 1/8.

d. So, to satisfy the Barkhausen criterion, the gain of the oscillator A = 8.

$$\text{Loop} = A|\beta| = (8)(1/8) = 1$$

e. In practice, a gain significantly higher than 8 is required for the oscillation to sustain.