XMUT303 Analogue Electronics

Note 9: Analogue Filters

Topics

- Filter functions.
- Passive filters.
- Active filters.
- Standard filters.

9.1. Analogue Filters

After covering op-amp based circuit, filter circuit is another example of the several circuits in analogue electronic that typically exist in practice. Other analogue circuits that will be covered in the course are power amplifier and power supply.

9.1.1. Filter Functions

Filter analysis typically performed with analysing frequency response through Bode plot e.g. gain and phase plots. The specific area of our interest in the plots for analysis is the frequencies around the cut-off frequency of the filter circuit e.g. $0.1f_0$, f_0, and $10f_0$. Furthermore, filter characteristics depend on order of system e.g. the higher the order the more precise outcome.

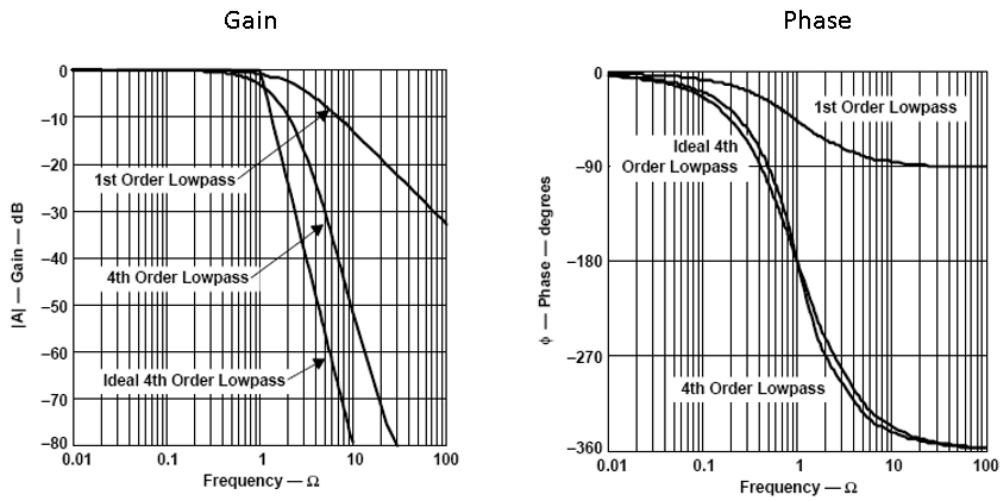

Figure 9.1: Frequency response (gain and phase plots) of various analogue filters

The gain and phase plots of the frequency response of the filter given above show the gain of the filter circuit as frequency is increased on the left-hand side plot. In the gain plot, the gain of first order low pass is typically flat at low frequency and it experiences -20 dB/decade roll off at higher frequency.

For the phase plot, the phase shift of first order filter is 0° at low frequency and at high frequency its phase shift settles down to -90°.

Notice also that the in the gain plot of the frequency response of higher-order filter such as the fourth-order filter rolls off at much steeper slope e.g. -80 dB/decade at higher frequency. On the other hand, the phase shift of fourth-order filter settles down at -360° at higher frequencies. But, the frequency response of the fourth-order filter is similar with the first-order filter at low frequencies.

Types and characteristics of the analogue filters are determined from the transfer function of the filter system.

$$H(s) = \alpha\left[\frac{(s-Z_1)(s-Z_2)\ldots}{(s-P_1)(s-P_2)\ldots}\right]$$

The figures given below show some example circuits of analogue filter circuits. The left circuit is a first order low-pass filter circuit, the middle circuit is a modified first order low-pass filter and the right circuit is a second order filter circuit. The relevant transfer functions of the circuits are also shown in the figure.

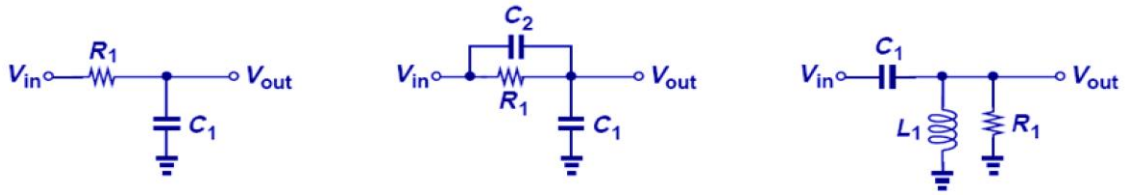

$$H_a = \frac{1}{s + \frac{1}{R_1 C_1}} \qquad H_b = \frac{s + \frac{1}{R_1 C_2}}{s + \frac{1}{R_1 (C_1 + C_2)}} \qquad H_c = \frac{1}{s^2 + \left(\frac{1}{R_1 C_2}\right) s + \frac{4}{L_1 C_1}}$$

Figure 9.2: Several examples of analogue filter circuits and their transfer functions

Performance of the filter can be analysed further with the pole-zero plot in the s-plane. With this plot, further characteristics and behaviours of the filter can be shown e.g. transient response, stability, damping, etc.

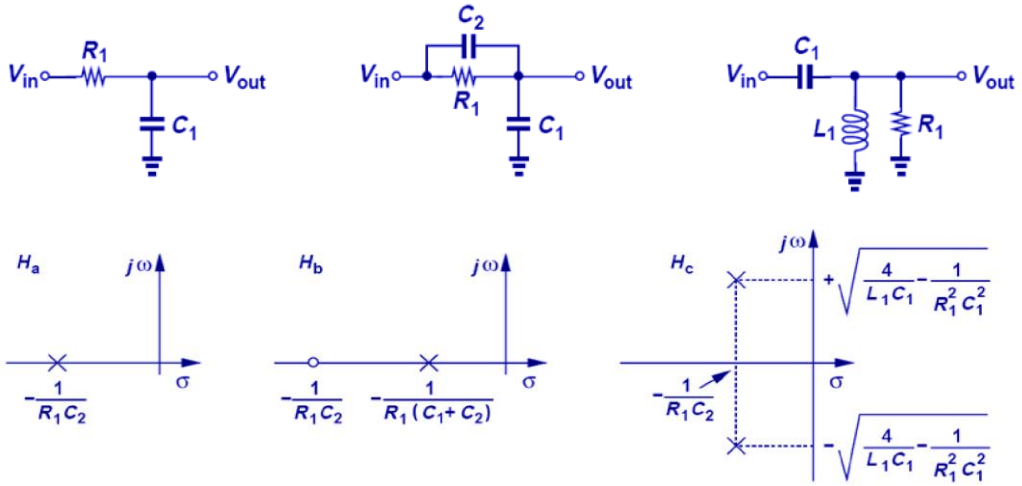

Figure 9.3: Various analogue filters with their respective root locus diagram

As shown in the figure given above, the pole-zero plot also illustrates the stability of the filter system. The location of the poles and zeros in the s-plane determine the stability of the filter circuit. As above, all of the filter circuits are stable as all of their poles and zeros exist in the left-hand side of the s-plane. More specifically, based on the real factor of the pole position and location in the plot e.g. σ, we can determine the stability of the filter system.

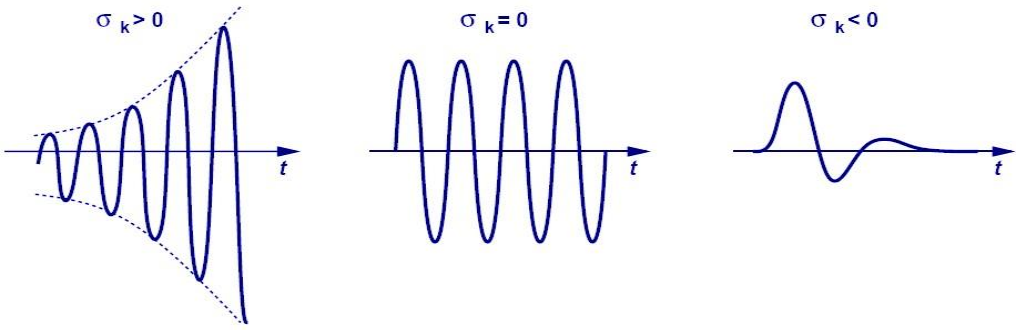

Figure 9.4: Transient responses of the analogue filter based on pole positions

As shown above, the transient response of analogue filter is growing oscillation when $\sigma > 0$, it is undamped oscillation when $\sigma = 0$, and it is damped oscillation when $\sigma < 0$.

9.1.2. Properties of Analogue Filters

There are several typical salient properties or parameters of analogue filters e.g. cut-off frequency, bandwidth, Q factor, stability, ripple performance, steepness of the response, sensitivity of the analogue filter component values and tolerances.

9.1.2.1. Cut off Frequency

The cut off frequency of the analogue filter (f_0) is the frequency at which the gain of the filter is at −3 dB. As shown in the figure below, the cut-off frequency is situated in the between passband and stop band. Meanwhile, there is a transition band that marks the change from the pass band to the stop band. Notice also ripples (e.g. oscillatory response in the plot) that might exist in pass band and/or stop band.

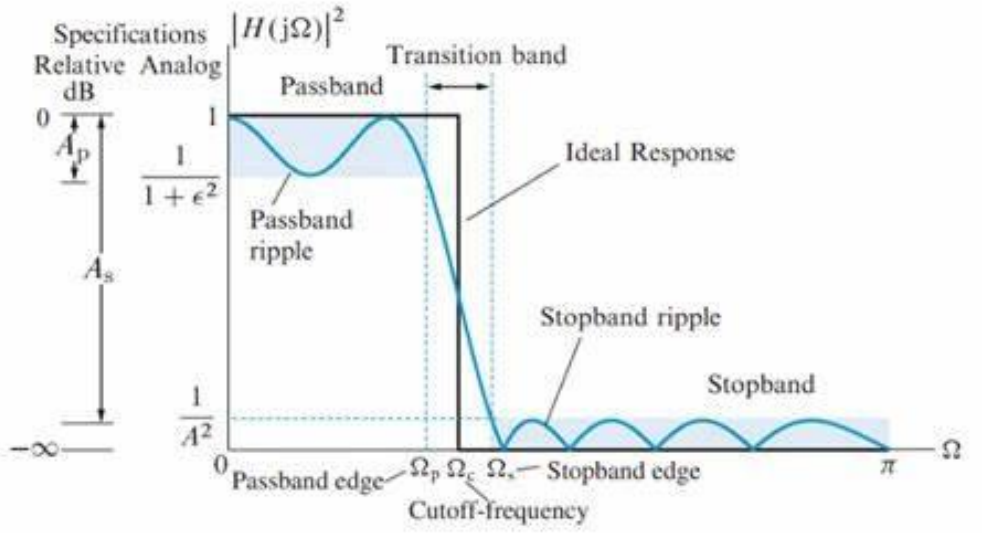

Figure 9.5: Cut-off frequency of analogue filter

The stop band frequency (f_s) is the frequency at which the minimum attenuation in the stopband is reached. The pass band ripple (A_{max}) is the variation (error band) in the pass band response. The minimum pass band attenuation (A_{min}) defines the minimum signal attenuation within the stop band. The steepness of the filter is defined as the order (M) of the filter. The higher the order the steeper the transition band, but this is at the expense of more ripples.

9.1.2.2. Q-Factor

Quality factor, Q measures sharpness of gain response.

$$Q = \frac{\omega_0}{\omega_2 - \omega_1} = \frac{f_0}{f_2 - f_1}$$

Furthermore, Q-factor determines the quality of the performance of the filter circuit. For a filter application, filter with high-Q-factor tends to cut off the signal better than filter with low-Q-factor.

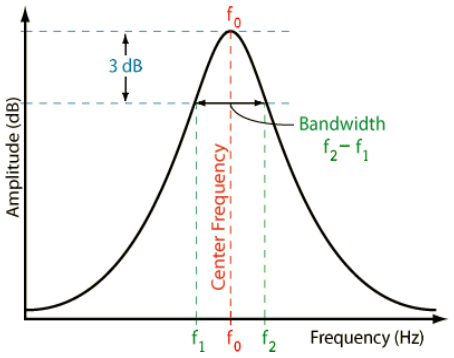

Figure 9.6: Determination of the Q-factor of analogue filter

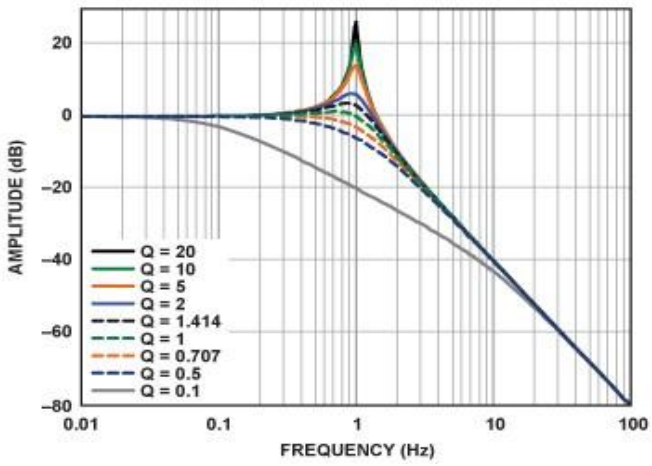

Figure 9.7: Graph of amplitude vs frequency of analogue filters with varied Q factor

9.1.2.3. Sensitivity

For filter application, sensitivity measures variation of a circuit parameter (P) due to variation of a circuit component (C).

$$S_C^P = \frac{\left(\frac{dP}{P}\right)}{\left(\frac{dC}{C}\right)}$$

For example, for filter circuit, these parameters could be gain, cut-off frequency, bandwidth, etc. The circuit component could be the value or tolerance of the resistor, capacitor, inductor, etc.

Example for Tutorial 1 – Sensitivity of Filter Circuit

For the circuit given in the figure below is a first-order low pass filter RC circuit.

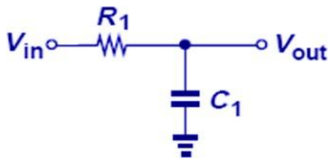

a. Determine the transfer function equation of the circuit and the equation for the sensitivity analysis. [4 marks]

b. Find the sensitivity of the cut-off frequency over the value of the resistor R_1, $S_{R_1}^{\omega_0}$ of the given low-pass filter circuit. [4 marks]

Solution

a. Transfer function of the filter is given as:

$$H_{(s)} = \frac{1}{s + \frac{1}{R_1 C_1}} \qquad \text{and} \qquad \omega_0 = \frac{1}{R_1 C_1}$$

b. The sensitivity of the ω_0 due to variation of R_1 ($S_{R_1}^{\omega_0}$) is the exponent of circuit equation:

$$S_{R_1}^{\omega_0} = -1$$

If R_1 is increased by a factor of 4, then ω_0 changes by:

$$\Delta\omega_0 = (4)^{-1} = 0.25$$

9.1.3. The Problem with Inductors

Capacitor is commonly preferred over the inductor in the filter design. From the ideality or "quality"– you cannot get L without R, as this is not a problem for capacitor. Physical size of the inductor is relatively bigger than capacitor.



Figure 9.9: Various types of the inductor for filter design

9.2. Passive Filters

We can realise a number of first order or second order passive filter circuits using passive components such as R, L, and C.

9.2.1. First-Order Low-Pass/High-Pass Filter

The transfer function of first order low-pass or high-pass filter is given as follows:

$$H(s) = \alpha\left(\frac{s + Z_1}{s + P_1}\right)$$

This first-order low-pass or high-pass filter is allowing low/high frequency signals to pass through respectively. The frequency response and root locus diagram of the high-pass filter and low-pass filter circuits are shown in the figures below.

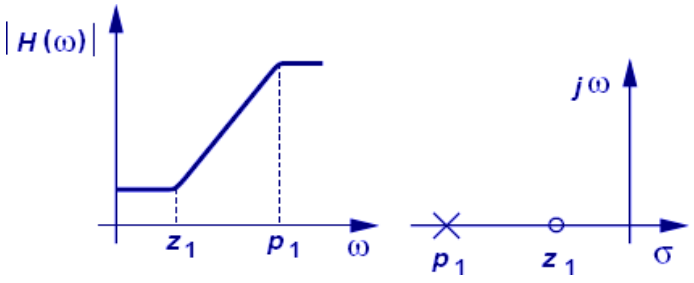

Figure 9.10: Frequency response and root locus of high-pass filter

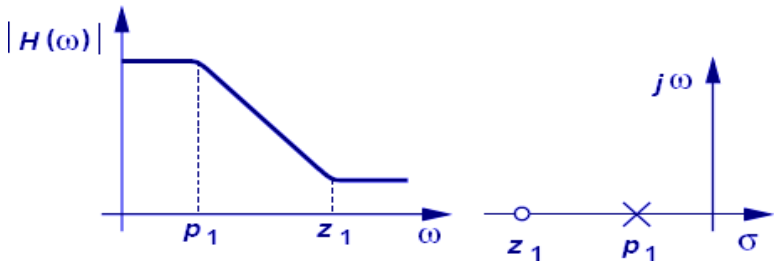

Figure 9.11: Frequency response and root locus diagram of low-pass filter

9.2.2. Tuneable First-Order Low-Pass/High-Pass Filter

Tuneable first-order low-pass or high-pass filters can be configured depending on values of components.

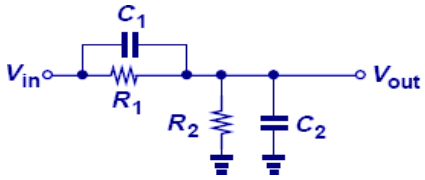

Figure 9.12: Tuneable low-pass/high-pass filter circuit

Depending on the values of resistors and capacitors in the circuit e.g. $R_2C_2 < R_1C_1$ (left) and $R_2C_2 > R_1C_1$ (right), we can construct a high-pass filter or a low-pass filter circuit accordingly.

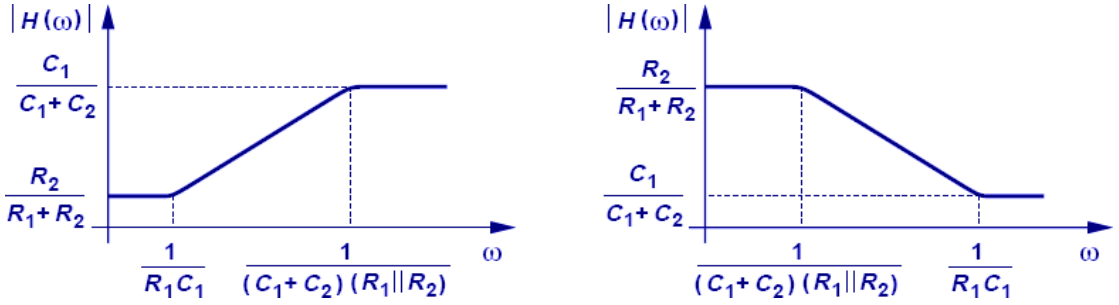

Figure 9.13: Frequency response of $R_2C_2 < R_1C_1$ (left) and $R_2C_2 > R_1C_1$ (right)

9.2.3. First-Order Band-Pass/Band-Stop Filter

First-order band-pass or band-reject filter is used to pass/reject signals within a given frequency range.

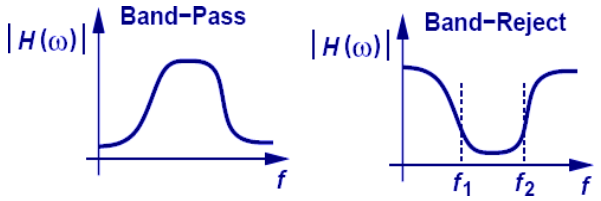

Figure 9.14: Frequency responses of band-pass (left) and band-reject (right) filters

Can we combine low-pass filter and high-pass filter to construct band-pass or band-stop filter circuits? First-order band-pass or band-stop filter circuits can be constructed from a number of discrete filters made up of low-pass and high-pass filters.

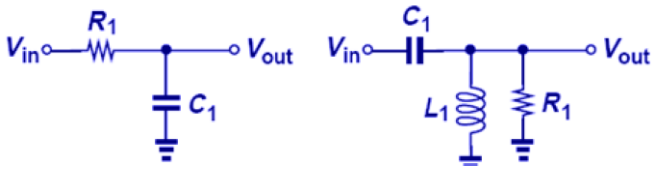

Figure 9.15: Passive analogue low-pass (left) and high-pass (right) filter circuits

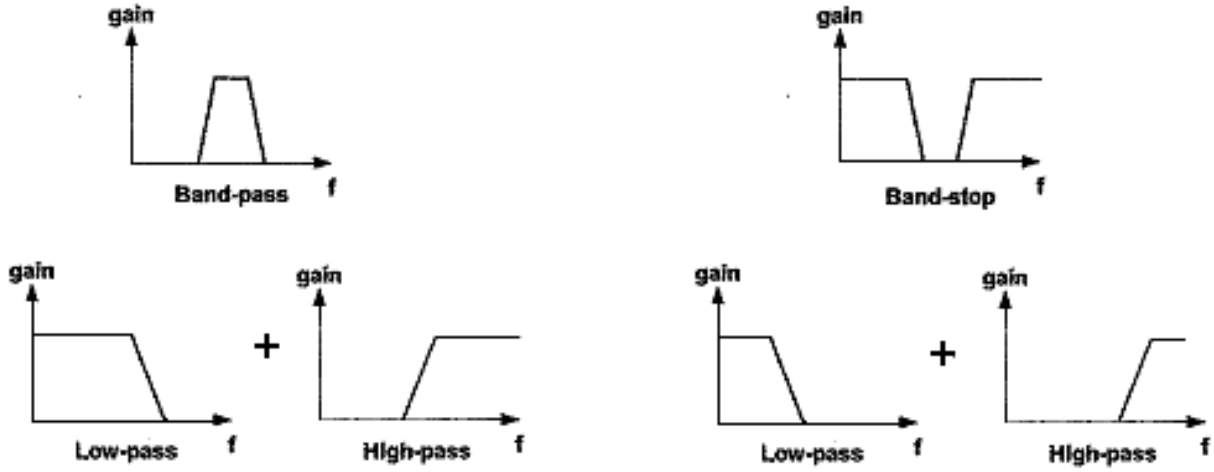

Figure 9.16: Frequency responses of band-pass or band-stop filters

The following figure shows a first-order discrete band-pass filter made up of two first-order RC and RL filter circuits.

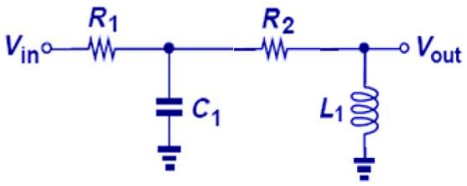

Figure 9.17: Discrete passive analogue band-pass filter circuit

On the other hand, we could also use L as complement to C to create an integrated band-pass filter circuit as shown in the following section. The following figure shows a first-order integrated band-pass LC filter circuit.

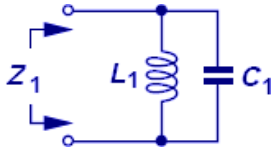

Figure 9.18: Integrated passive analogue band-pass filter circuit

First-order band-pass or band-stop filter can be constructed as a single alone filter circuit. Use L as complement to C? The transfer function of the first-order integrated band-pass filter circuit as shown in the figure below is:

$$Z_1 = \frac{L_1 s}{L_1 C_1 s^2 + 1}$$

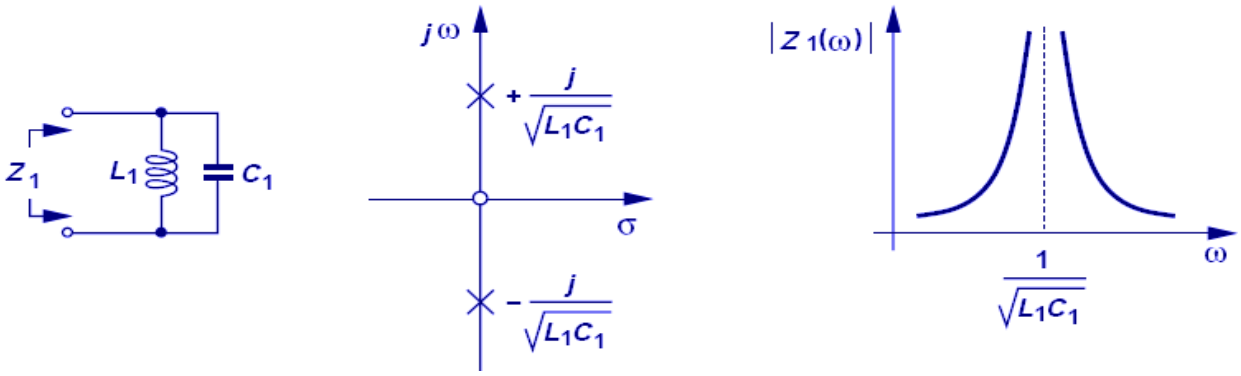

Figure 9.19: Passive analogue band-pass filter circuit, its root locus diagram and frequency response

Addition of R in the first-order band-pass/band-stop increases damping and reduces peak resonant frequency e.g. make filter to be more tuneable and stable. Use L, C and R in the filter circuit. The transfer function of the band-pass filter circuit given in the figure below is:

$$H(s) = \frac{L_1 s}{R_1 C_1 L_1 s^2 + L_1 s + R_1}$$

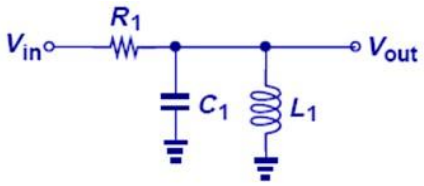

Figure 9.20: Passive analogue band-pass filter circuit

9.3. Second-Order RLC Filters

For second-order filter, types of the filter depend on the impedance of the filter circuit. The transfer function of the second-order RLC filter circuit as shown in the figure below is:

$$H(s) = \frac{Z_p}{Z_s + Z_p}$$

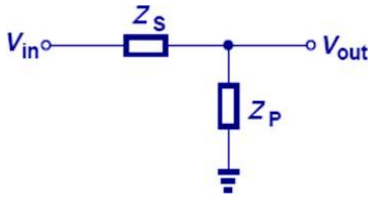

Figure 9.21: Second-order RLC filter circuit

Depending on the values of the impedances in the circuit, the frequency response of second-order RLC filter circuit is as shown in the figures given below.

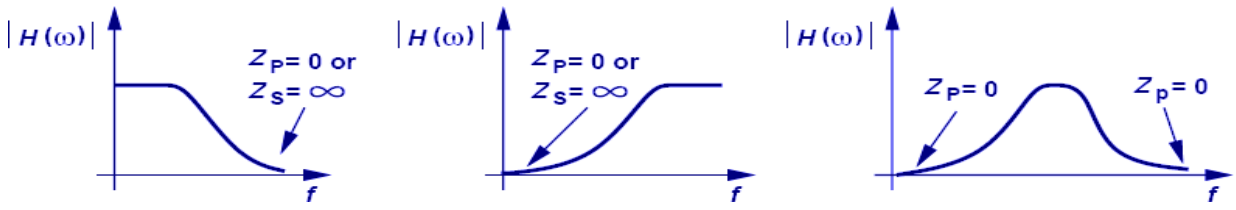

Figure 9.22: Frequency response plots of various passive analogue filters

To realise a low-pass filter, we need Z_p = 0 or Z_s = ∞ at higher frequency. For a high-pass filter, we need Z_p = 0 or Z_s = ∞ at low frequency. Then, for a band-pass filter Z_p = 0 at low frequency and Z_p = 0 at high frequency with zero or lower impedance at the pass-band frequency range.

9.3.1. Second-Order Low Pass Filter

Second-order low pass-filter e.g. L is in series before a parallel of R and C. The transfer function of the second-order low-pass filter circuit as shown in the figure below is:

$$H(s) = \frac{R_1}{R_1 C_1 L_1 s^2 + L_1 s + R_1}$$

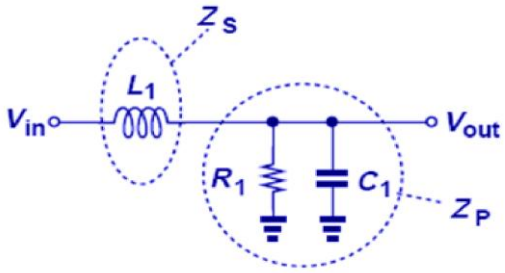

Figure 9.23: Second-order low-pass filter circuit

The frequency response of the second-order low-pass filter circuit is as shown in the figure below.

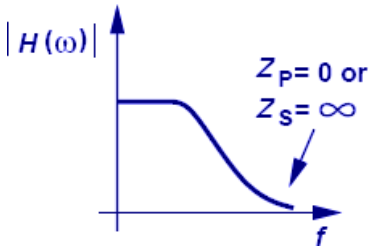

Figure 9.24: Frequency response plot of low-pass filter

Aside:

Which is filter circuit is better below?

- Low-pass filter realised with capacitor in parallel with resistor as in circuit (a).
- Low-pass filter realised with inductor in parallel with resistor as in circuit (b).

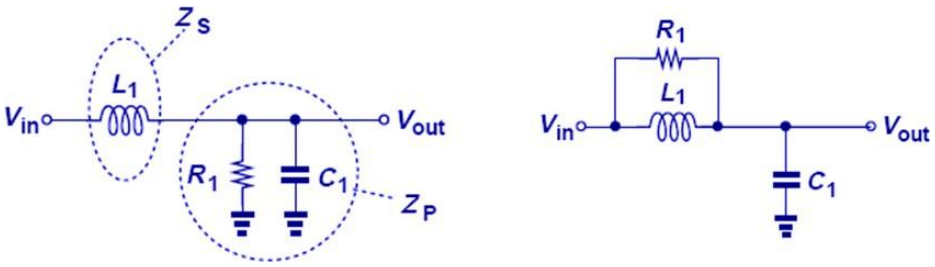

(a) (b)

Figure 9.25: Second-order low-pass filter circuit

The choice is really depending on the application and the design requirements of the filter circuit. It is difficult to determine which one is which just based on the choice and arrangement of the components in the circuit.

9.3.2. Second-Order High-Pass Filter

Second-order high-pass filter e.g. C is in series before a parallel of R and L. The transfer function of the second-order high-pass filter as shown in the figure below is:

$$H(s) = \frac{L_1 C_1 R_1 s^2}{R_1 C_1 L_1 s^2 + L_1 s + R_1}$$

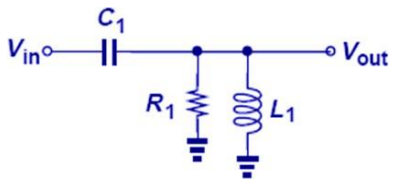

Figure 9.26: Second-order high-pass filter circuit

The frequency response of the second-order high-pass filter circuit is as shown in the figure below.

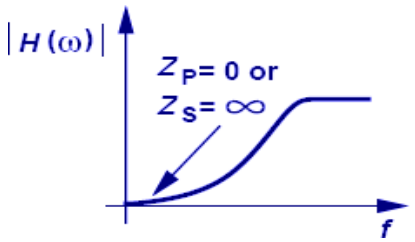

Figure 9.27: Frequency response plot of high-pass filter

9.3.3. Second-Order Band-Pass Filter/Band-Stop Filter

Second-order band-pass filter/band-stop filter e.g. R is in series before a parallel of C and L. The transfer function of the second-order band-pass filter circuit as shown in the figure below is:

$$H(s) = \frac{L_1 s}{R_1 C_1 L_1 s^2 + L_1 s + R_1}$$

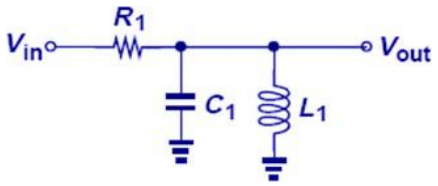

Figure 9.28: Second-order band-pass filter circuit

The frequency response of the second-order band-pass filter circuit is as shown in the figure below.

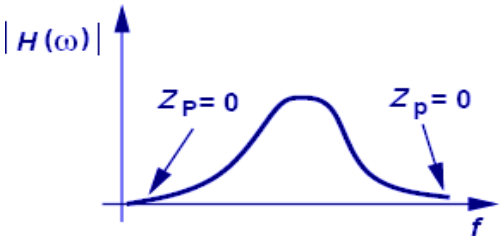

Figure 9.29: Frequency response plot of band-pass filter

9.3.4. Second-Order Notch-Reject/Single-Frequency Pass Filter

Second-order notch-reject/single-frequency-pass filter e.g. R is in series before a series of L and C. The transfer function of the second-order band-stop or band-stop filter circuit as shown below is:

$$H(s) = \frac{s^2 LC + 1}{s^2 LC + sRC + 1}$$

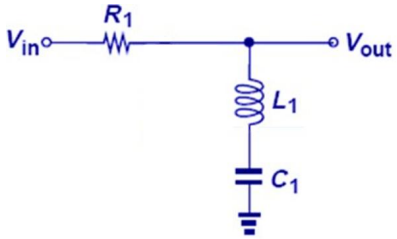

Figure 9.30: Second-order band-stop or band-reject filter

The frequency response of the second-order band-stop or band-reject filter circuit is as shown below.

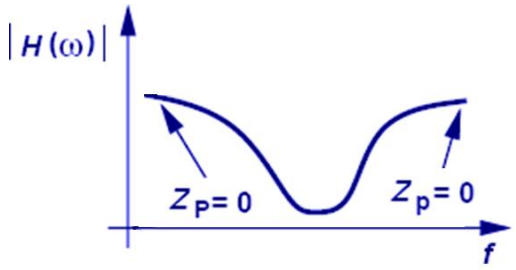

Figure 9.31: Frequency response of band-stoop or band-reject filter

Example for Tutorial 2 – Filter Design Example

For R = 1 Ω, L = 1 H, and C = 1 F, the frequency response of the second-order notch-reject filter circuit is as shown below. [4 marks]

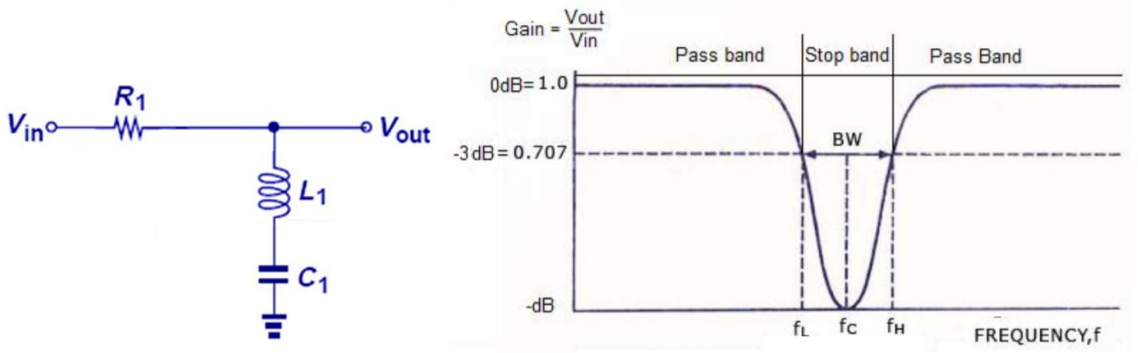

a. Describe the filter frequency response. [4 marks]

b. Derive the equation for the input impedance. [2 marks]

c. Determine the cut-off frequency of the filter. [2 marks]

Solution

a. Notice that in the frequency response of the band stop or band reject filter as shown in the figure below, an (almost) single frequency component of the signal at the cut-off frequency of the filter f_c being filtered is removed by the filter.

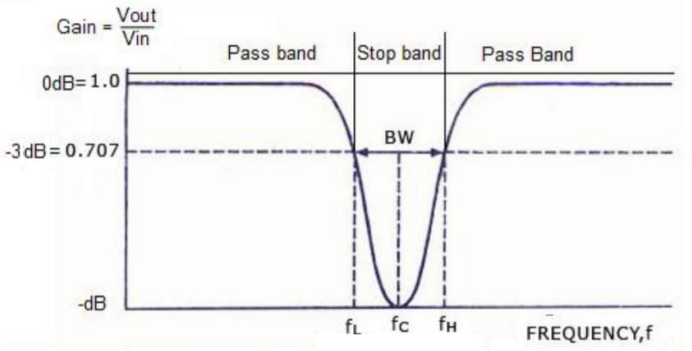

Notice the narrow width of the lower (f_l) and upper (f_h) frequencies of the given band-stop or band-reject filter circuit.

b. The input impedance of the filter is:

$$Z_{in} = R + \frac{1}{j\omega C} + j\omega L = R + j\left(\omega L - \frac{1}{\omega C}\right)$$

c. The cut-off frequency is when the inductive reactance = capacitive reactance:

$$f_0 = \frac{1}{2\pi\sqrt{LC}} = \frac{1}{2\pi\sqrt{(1)(1)}} = 0.159 \text{ Hz}$$

9.3.5. All-Pass Filter

All-pass filter is a type of analogue filter circuit used to add phase shift (delay) to the response of the circuit. The amplitude of an all-pass is unity for all frequencies, but its phase response changes as the frequency is swept from 0 to ∞.

$$\omega_0 = \frac{1}{R_1 C_1}$$

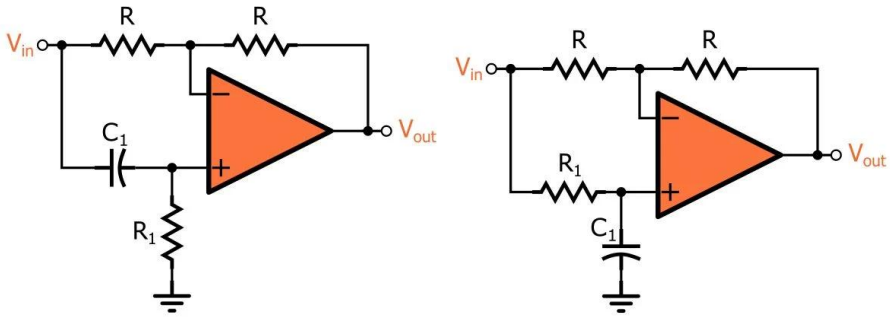

Figure 9:34: All-pass filter circuits: phase shift -180° to 0° (left) and 0° to -180° (right)

9.3.6. Types of Filters

The table below lists a number of commonly found analogue electronics filters and their specifications.

FILTER TYPE	MAGNITUDE	POLE LOCATION	TRANSFER EQUATION
LOWPASS	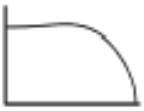		$\frac{\omega_0^2}{s^2 + \frac{\omega_0}{Q}s + \omega_0^2}$
BANDPASS			$\frac{\frac{\omega_0}{Q}s}{s^2 + \frac{\omega_0}{Q}s + \omega_0^2}$
NOTCH (BANDREJECT)			$\frac{s^2 + \omega_z^2}{s^2 + \frac{\omega_0}{Q}s + \omega_0^2}$
HIGHPASS	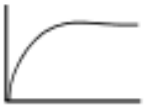		$\frac{s^2}{s^2 + \frac{\omega_0}{Q}s + \omega_0^2}$
ALLPASS	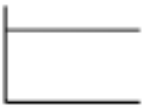		$\frac{s^2 - \frac{\omega_0}{Q}s + \omega_0^2}{s^2 + \frac{\omega_0}{Q}s + \omega_0^2}$

Table 9.1: Common analogue electronics filters

9.4. Standard Analogue Filters

There are various standard analogue filter designs, but we will cover e.g. Butterworth, Chebyshev, Bessel, and Elliptic filters in this course.

9.4.1. Butterworth Filter

Butterworth response filter has a quality factor, Q = 0.707. For a Q = 0.707, it is the best compromise between attenuation and response. It has no ripple in passband and stop band -> maximum flat filter. It

has a maximally-flat pass band and $20n$ dB/decade roll-off (note: n = order of the filter). The frequency response of Butterworth filter is shown in the figure below.

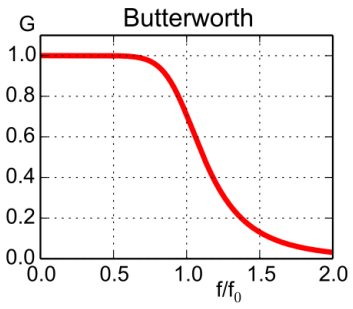

Figure 9.35: Frequency response plot of Butterworth filter

9.4.2. Chebyshev Filter

The Chebyshev response filter has quality factor, $Q > 0.707$. It has ripple in pass band (type I) or ripple in the stop band (type II). For type I, the cut-off frequency, ω_0 is not at -3 dB, instead ω_0 is defined at ripple minimum. This filter has sharper roll-off than Butterworth filter.

Ripple	Q
0.1 dB	0.7674
0.5 dB	0.8637
1 dB	0.9565

Table 9.2: Ripple factor values and Q-factors of Chebyshev filter

More specific types of Chebyshev filter are shown in the table above. The frequency response of Chebyshev type 1 and type 2 filters are shown in the figures given below.

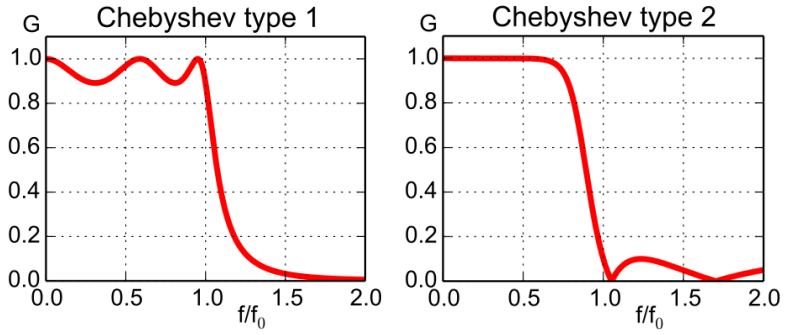

Figure 9.36: Frequency response plot of Chebyshev filter

9.4.3. Bessel Filter

Bessel response filter has q-factor, Q = 0.577. It has no ripple present, but at the expense of slow response. It has linear phase response e.g. no signal distortion in pass band and gentlest roll-off. The frequency response of the filter is shown below.

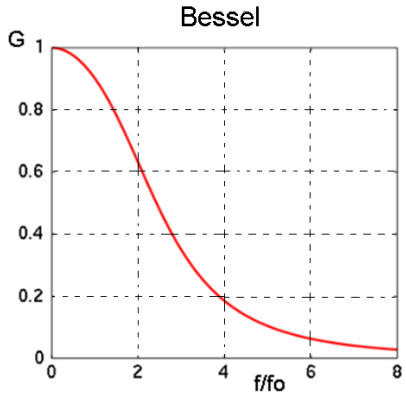

Figure 9.37: Frequency response plot of Bessel filter

9.5.4. Elliptic Filter

The elliptic filter has elliptic or notch (zero) just outside the pass band. It has some ripples in pass band and stop band. It has the sharpest roll-off. The frequency response of the elliptic filter is shown below.

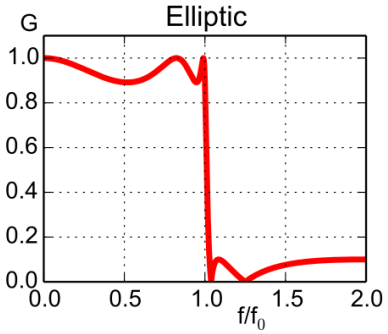

Figure 9.38: Frequency response plot of elliptic filter

9.5.5. Differences between Standardised Analogue Filters

Among the difference between the standardised analogue filters, these are sharpness/skew, ripple, and roll off. The following figure shows the response comparison of Butterworth, Chebyshev and Bessel.

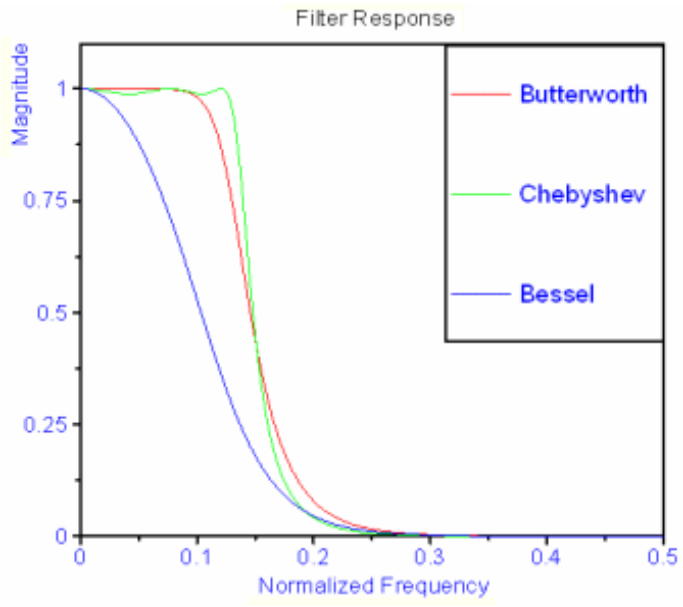

Figure 9.39: Magnitude vs. normalised frequency of several standardised analogue filter

Key idea from the standard analogue filter: Butterworth, Chebyshev, & Bessel filters are the same circuits with different Q factor and Q factor determines the sharpness of the filter frequency response.

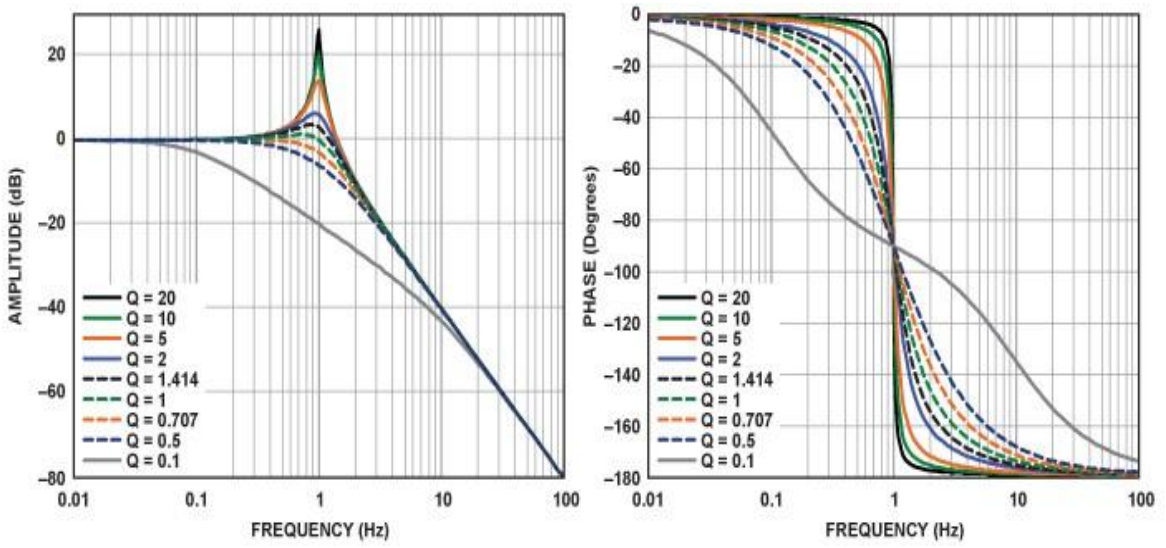

Figure 9.40: Graphs of magnitude (left) and phase (right) plots in frequency response of analogue filters

The considerations in designing a filter circuit are:

- Response of the pass band must be maximum flatness.
- Slow transition from pass band to the stop band.

- Ability of the filter to pass signals without any distortions within the pass band caused by the phase shifts of the waveforms.
- For transient response -> faster rising and falling time parameters.

Referring to given standardized filter model, for maximum flat response we could opt for the Butterworth filter. Whereas if we wish to avoid for slow transition from pass band to stop band, the Chebyshev filter is a better solution. For maximum flat time delay, we could choose the Bessel filter.

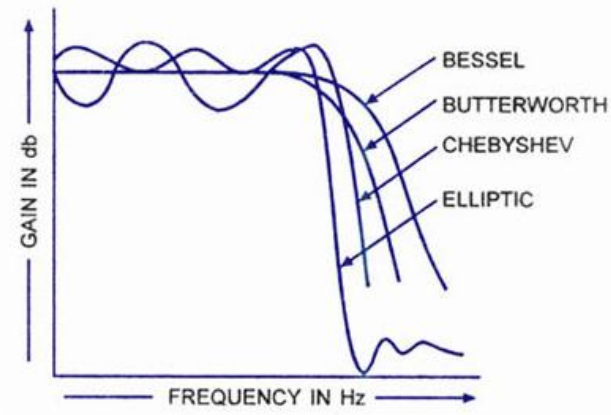

Figure 9.41: Graph of gain vs. frequency of various standardised analogue filters

9.5.6. Higher Order Standard Filters

Higher order standard filters can typically be constructed of combination of first and second order standard filters:

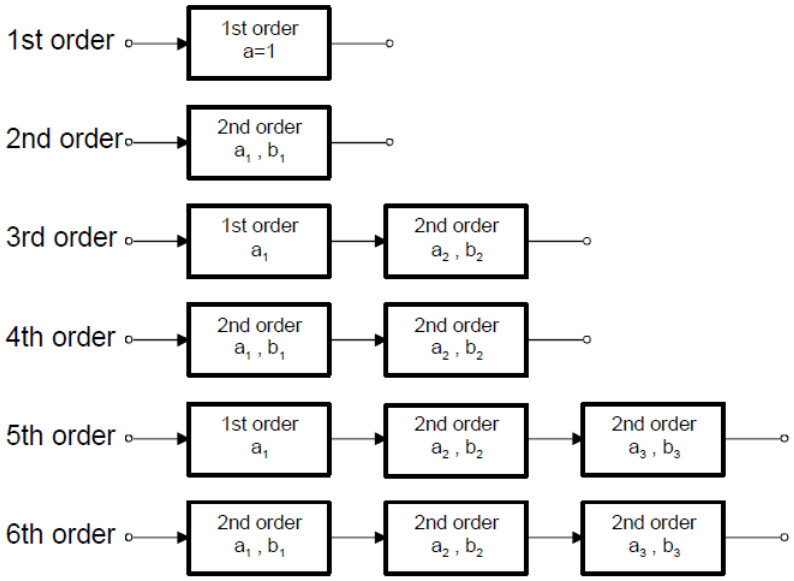

Figure 9.42: Higher order standard filters

As illustrated above a fourth order standard filters can be made of two second order filter stages and a fifth order standard filter can be constructed out of one first order filter stage and two second order filter stages. To determine the values of the components in the higher order standard filters, we need to determine the damping factor and critical frequency of the filter circuit.

For a first-order filter, the damping factor of (single pole):

$$DF = 2 - \frac{R_1}{R_2}$$

Critical or cut-off frequency of first order filter:

$$\omega_0 = \frac{1}{RC}$$

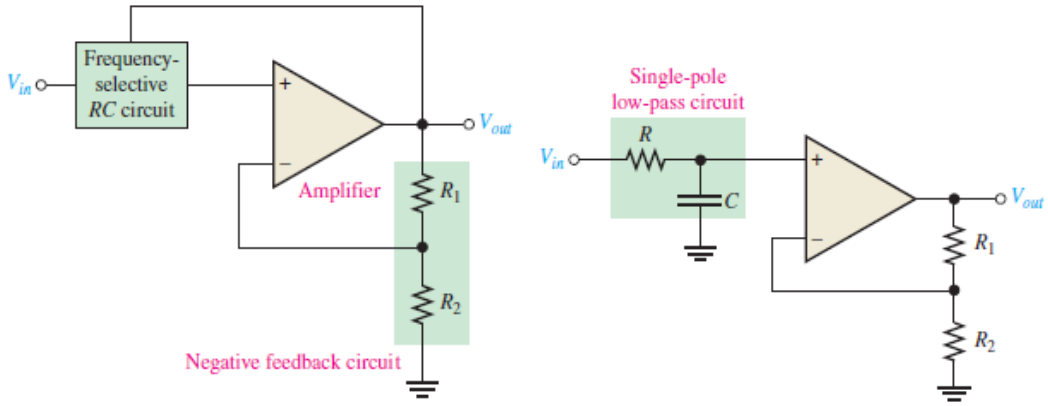

Figure 9.43: First order filter circuit

The following figure shows cascading higher order filter poles consisted of multiple stages of first-order filter. It is a third order filter made up of three first order RC filter circuits.

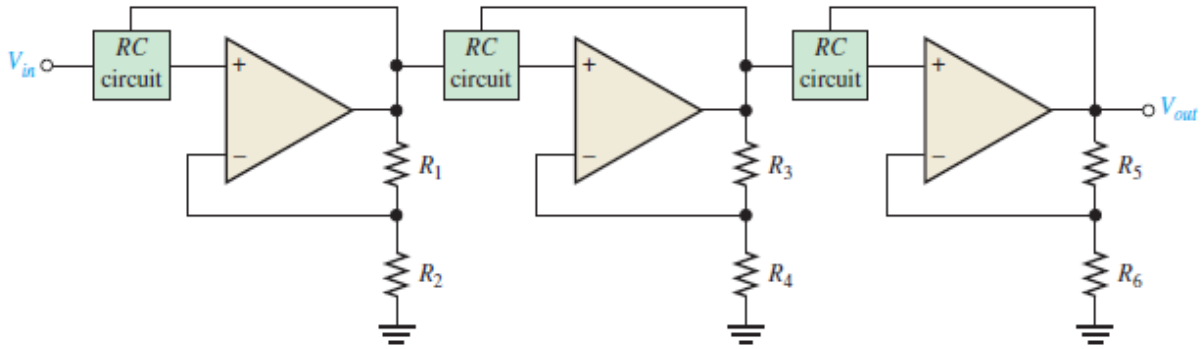

Figure 9.44: Cascaded higher-order filter consisted of multiple stages of first order filter

The table below shows the configuration of higher-order Butterworth standard filter for up to sixth order made up of three first and/or second order stages.

Order	Roll-Off dB/Decade	1st Stage			2nd Stage			3rd Stage		
		Poles	DF	R_1/R_2	Poles	DF	R_1/R_2	Poles	DF	R_1/R_2
1	-20	1	Optional							
2	-40	2	1.414	0.586						
3	-60	2	1.00	1	1	1.00	1			
4	-80	2	1.848	0.152	2	0.765	1.235			
5	-100	2	1.00	1	2	1.618	0.382	1	0.618	1.382
6	-120	2	1.932	0.068	2	1.414	0.586	2	0.518	1.482

Table 9.3: Configuration of higher order Butterworth standard filter

Example for Tutorial 3 – Standard Analogue Filter Analysis

Given in the figure below is a fourth-order filter.

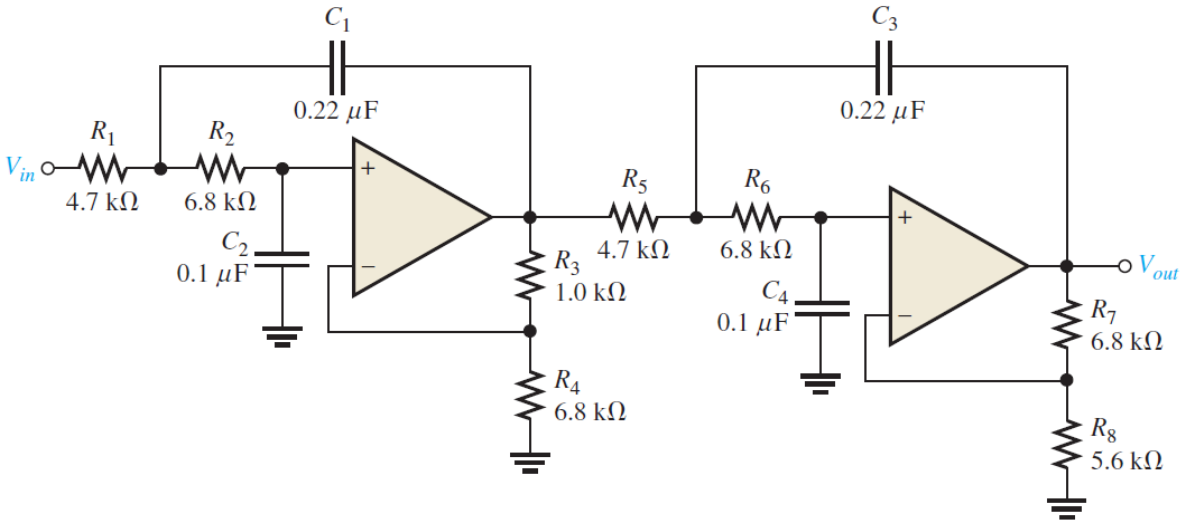

a. Is the four-pole filter approximately optimised for a Butterworth response? What is the roll-off rate? [10 marks]

b. Determine the critical frequency of the filter. [4 marks]

c. Without changing the response curve, adjust the component values in the filter to make it an equal-value components filter. Select C = 0.22 µF for both stages. [10 marks]

d. Modify the filter to increase the roll-off rate to -120 dB/decade while maintaining an approximate Butterworth response. [6 marks]

e. Show how to implement the following roll-off rates using single-pole and two-pole low-pass filters with the Butterworth responses.

i. -20 dB/decade. [2 marks]

ii. -40 dB/decade. [2 marks]

iii. -60 dB/decade. [2 marks]

iv. -100 dB/decade. [2 marks]

v. -120 dB/decade. [2 marks]

Solution

a. The filter circuit is a type of fourth-order high-pass filter circuit that has double two-pole parts e.g. first stage and second stage.

The damping factor of the 1st stage is:

$$DF = 2 - \left(\frac{R_3}{R_4}\right) = 2 - \left(\frac{1\ \text{k}\Omega}{6.8\ \text{k}\Omega}\right) = 1.85$$

The damping factor of the 2nd stage is:

$$DF = 2 - \left(\frac{R_7}{R_8}\right) = 2 - \left(\frac{6.8\ \text{k}\Omega}{5.6\ \text{k}\Omega}\right) = 0.786$$

From the filter response table given in the Appendix, the 1st stage DF = 1.848 and the 2nd stage DF = 0.765. Therefore, this filter is approximately Butterworth.

With double two-pole parts, the filter circuit has a roll-off rate = 80 dB/decade.

b. The cut-off frequency of the filter circuit is calculated when:

$$f_0 = \frac{1}{2\pi\sqrt{R_1 R_2 C_1 C_2}} = \frac{1}{2\pi\sqrt{R_5 R_6 C_3 C_4}}$$

Thus, it is:

$$f_0 = \frac{1}{2\pi\sqrt{(4.7\text{k}\Omega)(6.8\text{k}\Omega)(0.22\mu\text{F})(0.1\mu\text{F})}} = 190\ \text{Hz}$$

c. Considering the values of the resistor, $R_1 = R_2 = R_5 = R_6 = R$ and the capacitor, $C_1 = C_2 = C_3 = C_4 = C$, then let the capacitor, C = 0.22 µF for both stages.

The cut-off frequency of the filter is:

$$f_0 = \frac{1}{2\pi\sqrt{R^2C^2}} = \frac{1}{2\pi RC}$$

Thus, the value of the resistor is:

$$R = \frac{1}{2\pi f_c C} = \frac{1}{2\pi(190\text{ Hz})(0.22\text{ µF})} = 3.81\text{ kΩ}$$

Thus, referring to E12 component standard, we choose R = 3.9 kΩ.

d. To realise -120 dB/decade roll-off rate, we need to add another identical stage in the given filter circuit and change the ratio of the feedback resistors to 0.068 for first stage, 0.586 for second stage, and 1.482 for third stage. See the following figure for its detailed implementation.

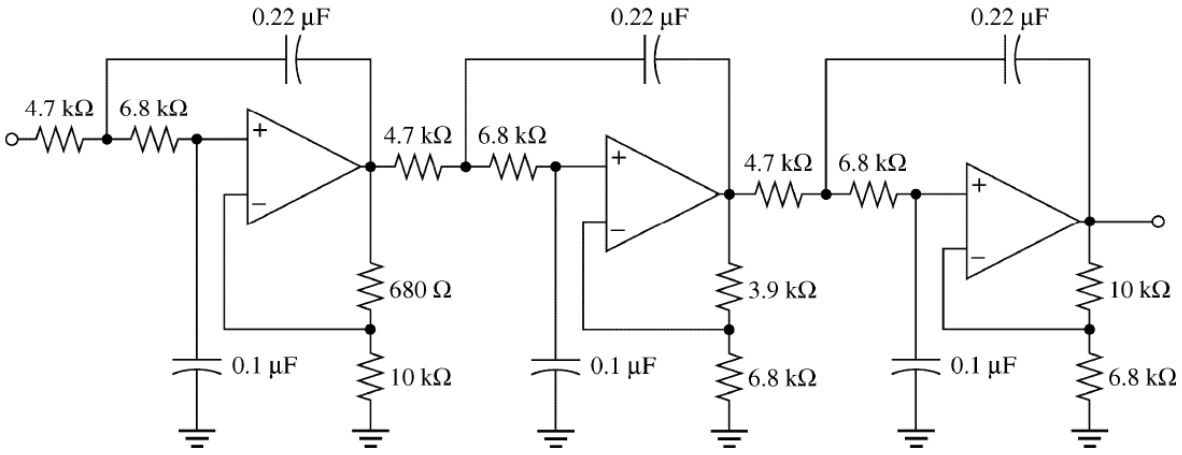

e. By making the approximate Butterworth response, realise the filter circuit as the following arrangements:

i. -20 dB/decade - 1 pole.

ii. -40 dB/decade - 2 poles.

iii. -60 dB/decade - 1 pole and 2 poles.

iv. -100 dB/decade - 1 pole, 2 poles, and 2 poles.

v. -120 dB/decade - 2 poles, 2 poles, and 2 poles.

9.6 Active Filters

There are several examples of active filters that we cover in this course: V-Buffer filter, Sallen-Key filter, Voltage Control Voltage Source (VCVS) filter, BiQuad filter, State-Variable filter, and Multiple Feedback (MFB) filter.

9.6.1. V-Buffer Filter

V-buffer filter can be constructed by adding a passive filter with an op amp buffer circuit. For a first order filter system e.g. single pole, we can add a first order RC filter as shown below with a buffer or voltage follower.

The characteristics of these filters are similar to its passive filter counterparts, except that it does not have loading issue between the input with the output parts with the inclusion of the buffer circuit.

Op amp in the circuit is more like of a buffer role e.g. providing isolation of the filter from the load or next stage. The following figures show high pass and low pass v-buffer filter circuits.

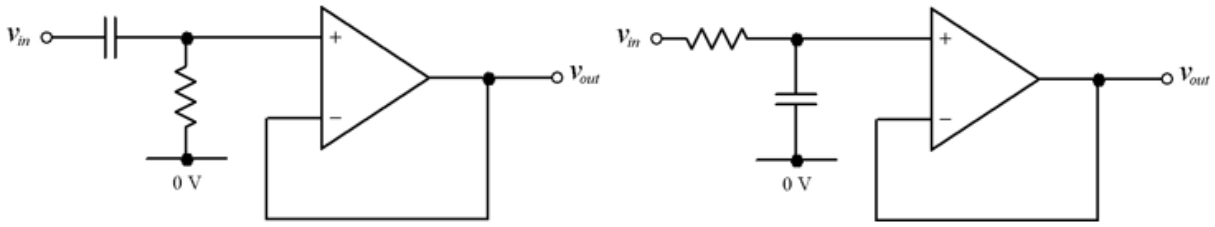

Figure 9.45: First-order high pass (left) and low pass (right) V-Buffer filter circuits

The following figures outline low pass and high pass v-buffer second order filter system e.g. filter with two poles.

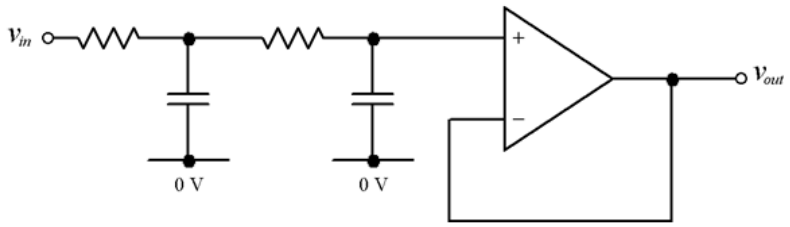

Second-Order Low Pass Filter

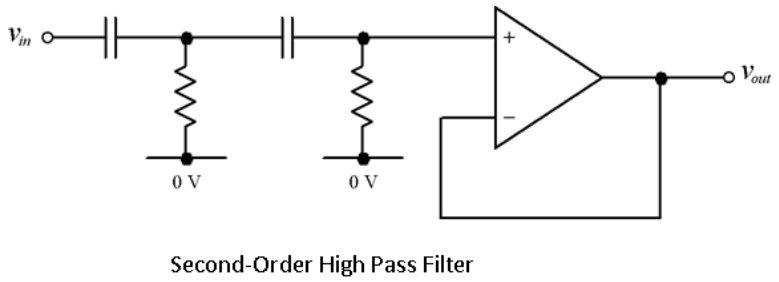

Figure 9.46: Second order high pass (left) and low pass (right) V-Buffer filter circuits

9.6.2. Sallen-Key Filter

Sallen-Key filter is a type of second order filters e.g. it has two poles. The transfer function of a typical Sallen-Key filter circuit as shown in the figure below is:

$$H(s) = \frac{1}{R_1 R_2 C_1 C_2 s^2 + (R_1 + R_2) C_2 s + 1}$$

The cut-off frequency of the Sallen-Key filter circuit is:

$$\omega_0 = \frac{1}{\sqrt{R_1 R_2 C_1 C_2}}$$

The quality factor of the Sallen-Key filter circuit is:

$$Q = \frac{1}{R_1 + R_2} \sqrt{R_1 R_2 \frac{C_1}{C_2}}$$

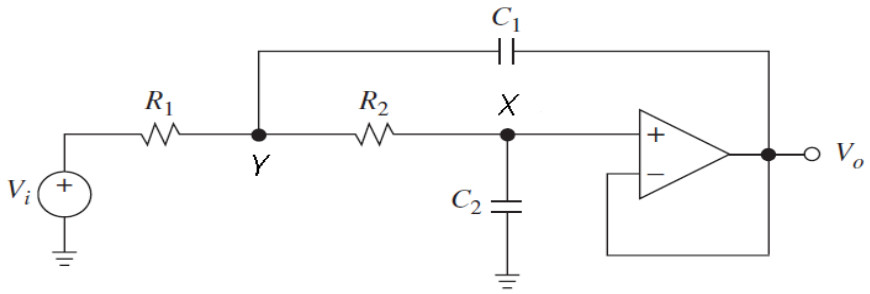

Figure 9.47: Sallen-Key filter circuit

9.6.2.1. Second Order Transfer Functions of Sallen Key Filter

By referring to the (generalised) standard second order transfer functions of Sallen-Key filter:

$$H(s) = \frac{\omega_0^2}{s^2 + 2\alpha s + \omega_0^2} = \frac{\omega_0^2}{s^2 + s(\omega_0/Q) + \omega_0^2} = \frac{K}{s^2 + as + b}$$

Where: K is attenuation.

Quality factor of Sallen-Key filter is:

$$Q = \frac{\omega_0}{2\alpha} = \frac{\sqrt{b}}{a}$$

Gain of Sallen-Key filter is:

$$\mu = \frac{K}{b}$$

Cut-off frequency of Sallen-Key filter is:

$$\omega_0 = \sqrt{b}$$

Often that we rewrite Sallen-Key filter transfer function to give normalized s^2 term:

$$H(s) = \frac{\frac{1}{R_1 R_2 C_1 C_2}}{s^2 + \left[\frac{(R_1 + R_2)}{R_1 R_2 C_1}\right] s + \frac{1}{R_1 R_2 C_1 C_2}}$$

9.6.2.2. Design of Sallen-Key Filter

As shown in the Sallen-Key filter circuit given in the figure below, to simplify the design, typically we set the following resistor and capacitor components in the filter circuit:

$$R_1 = mR$$

$$R_2 = R$$

$$C_1 = nC$$

$$C_2 = C$$

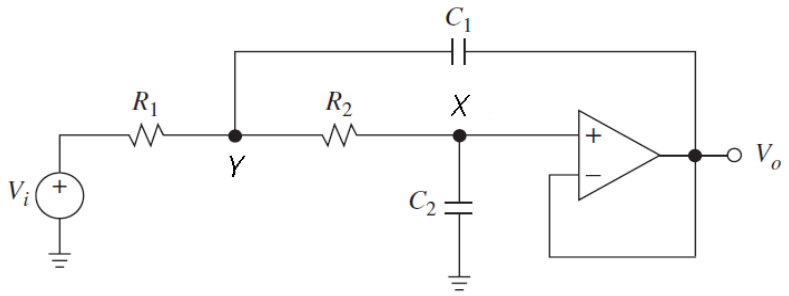

Figure 9.48: Sallen-Key filter circuit for design example

Thus, the transfer function equation of the filter circuit is:

$$H(s) = \frac{\frac{1}{R_1 R_2 C_1 C_2}}{s^2 + \left[\frac{(R_1 + R_2)}{R_1 R_2 C_1}\right] s + \frac{1}{R_1 R_2 C_1 C_2}}$$

$$= \frac{\frac{1}{(mR)(R)(nC)(C)}}{s^2 + \left[\frac{(mR + R)}{(mR)(R)(nC)}\right] s + \frac{1}{(mR)(R)(nC)(C)}}$$

$$= \frac{\frac{1}{mnR^2C^2}}{s^2 + s\left[\frac{R(m+1)}{mnR^2C}\right] + \frac{1}{(mnR^2C^2)}} = \frac{\omega_0^2}{s^2 + s(\omega_0/Q) + \omega_0^2}$$

Now, determine the required cut-off frequency of Sallen-Key filter is:

$$\omega_0 = \frac{1}{RC\sqrt{mn}}$$

And quality factor of Sallen-Key filter is:

$$Q = \frac{\sqrt{mn}}{m+1}$$

Example for Tutorial 4 – Sallen-Key Filter

An active Sallen-Key filter circuit is shown in the figure below. It has the following components: R_1 = 10 kΩ, R_2 = 1 kΩ, C_1 = 4.7 μF, and C_2 = 1 μF.

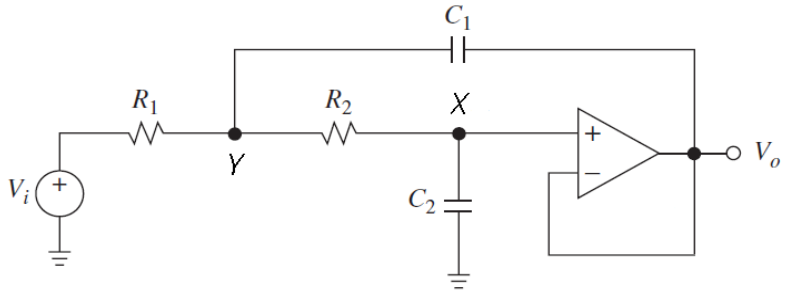

Determine the cut-off frequency and quality factor of the filter. [12 marks]

Solution

As shown in the Sallen-Key filter circuit given in the figure above, to simplify the design, typically we set specifically the resistor and capacitor components in the filter circuit.

Knowing that $R_1 = mR$, $R_2 = R$, $C_1 = nC$, and $C_2 = C$. Thus, the values of the resistor and capacitor in the filter circuit are:

$$R = R_2 = 1\ \text{k}\Omega$$

$$C = C_2 = 1\ \mu\text{F}$$

The constants in the parameters of the filter circuit are:

$$m = \frac{R_1}{R_2} = \frac{10\ \text{k}\Omega}{1\ \text{k}\Omega} = 10$$

$$n = \frac{C_1}{C_2} = \frac{4.7\ \mu\text{F}}{1\ \mu\text{F}} = 4.7$$

The cut-off frequency of Sallen-Key filter is:

$$\omega_o = \frac{1}{RC\sqrt{mn}} = \frac{1}{(1\ \text{k}\Omega)(1\mu\text{F})\sqrt{(10)(4.7)}} = 145.86\ \text{Hz}$$

The quality factor of Sallen-Key filter is:

$$Q = \frac{\sqrt{mn}}{m+1} = \frac{\sqrt{(10)(4.7)}}{10+1} = 0.623$$

9.6.3. Voltage-Controlled Voltage-Source Filter

The VCVS filter is another version of Sallen-Key filter with a gain tuneable part implemented as integral part of the filter.

9.6.3.1. Voltage-Controlled Voltage-Source (VCVS) Filter

Voltage controlled voltage source (VCVS) filter is very similar to Sallen-Key filter with addition of R_3 & R_4. These resistors allow independent gain control. As shown in the filter circuit in the figure given below, this gives both the filtering and amplification or attenuation functionalities in the filter.

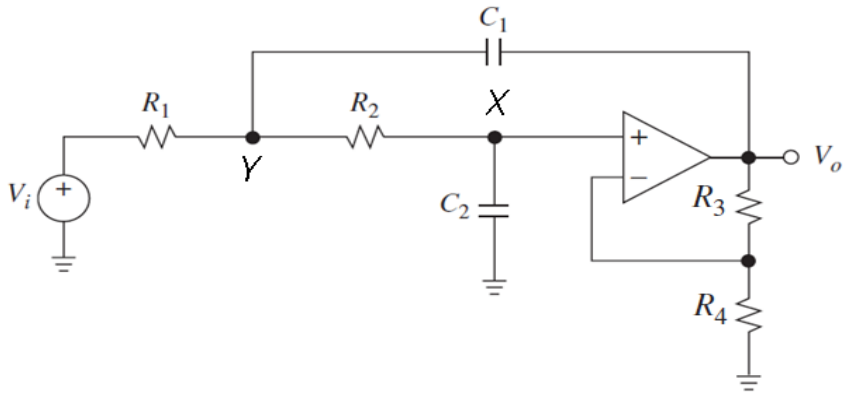

Figure 9.49: Voltage-controller voltage-source filter circuit

9.6.3.2. Design a VCVS Filter

For the given VCVS filter circuit as shown in the figure below, we can design the values of components used in the filter circuit.

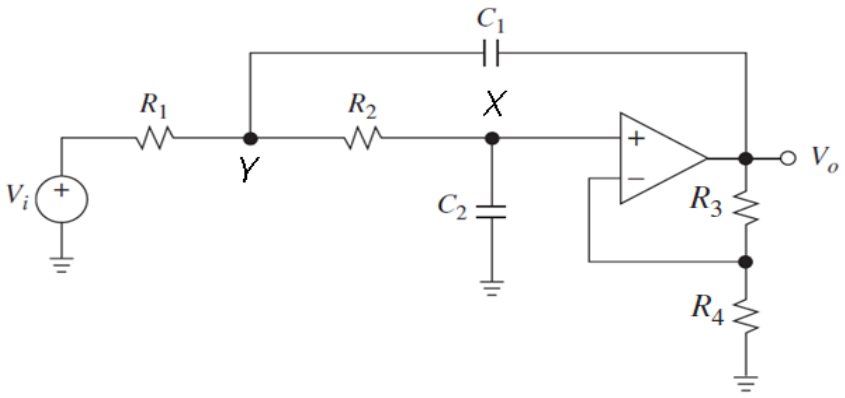

Figure 9.50: VCVS filter circuit

Set the resistors and capacitors in the VCVS filter circuit:

$$R_1 = R_2 = R \qquad\qquad C_1 = C_2 = C$$

Now, the parameters of the standard second order transfer function of the VCVS filter circuit are:

$$K = \frac{\mu}{R^2C^2} \qquad a = \frac{1}{RC}(3-\mu) \qquad b = \frac{1}{R^2C^2}$$

In this case, the gain of the VCVS filter is:

$$\mu = 1 + R_3/R_4$$

This gives cut-off frequency of VCVS filter:

$$\omega_0 = \frac{1}{RC}$$

With quality factor of the VCVS filter is:

$$Q = \frac{1}{3-\mu}$$

9.6.4. Bi-Quad Filter

A more complex example of analogue filter is a third order Bi-Quad filter. This filter is considered complex as it has a number of functionalities and characteristics built in the circuit.

9.6.4.1. Bi-Quad Filter

Among more complex analogue filters, Bi-Quad filter is one of the easiest filter topologies to tune. Referring to the standard second order transfer function, the transfer function parameters of Bi-Quad filter circuit are:

$$K = \frac{1}{R_1 R_4 C^2} \qquad a = \frac{1}{R_2 C} \qquad b = \frac{1}{R_3 R_4 C^2}$$

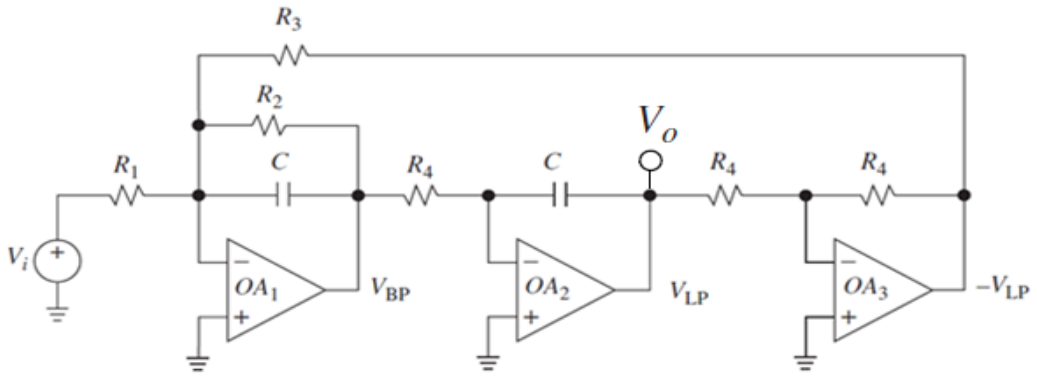

Figure 9.51: Bi-Quad filter circuit

Filter properties such as gain, cut-off frequency and Q-factor of Bi-Quad filter are:

$$\mu = R_3/R_1 \qquad \omega_0 = \frac{1}{\sqrt{R_3 R_4 C^2}} \qquad Q = \frac{\sqrt{R_3 R_4}}{R_2}$$

9.6.4.2. Design a Bi-Quad Filter

For designing a Bi-Quad filter circuit as shown in the figure below, choose arbitrary the values of resistor R_4 and capacitor C. Now, R_1 controls K, R_2 determines a, and R_3 gives b. In terms of filter performance, set R_3 to give desired ω_0, then choose R_2 for desired Q, and R_1 for gain, μ.

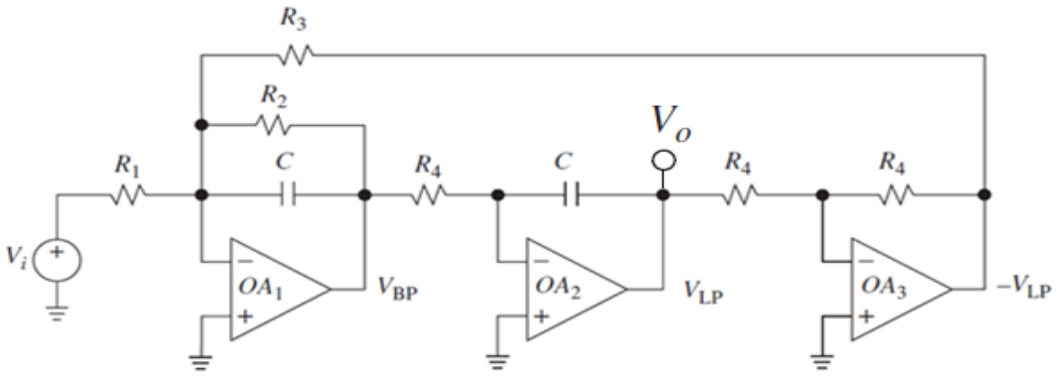

Figure 9.52: Bi-Quad filter circuit for the design example

Example for Tutorial 5 – Bi-Quad Filter

The following diagram shows the circuit of a Bi-Quad filter. The values of the components in the filter are R_1 = 1 kΩ, R_2 = 2.2 kΩ, R_3 = 4.7 kΩ, R_4 = 6.8 kΩ, and C = 1 μF. Determine the following circuit parameters.

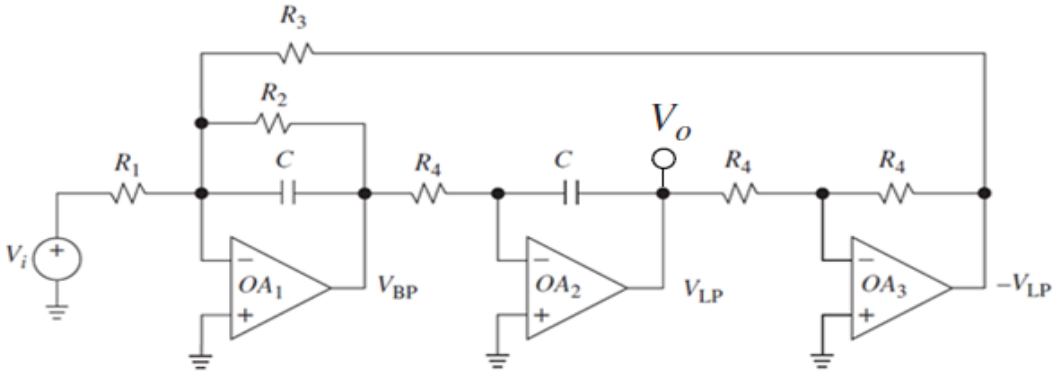

a. Gain of the filter. [5 marks]

b. Cut-off frequency of the filter. [5 marks]

c. Q-factor of the filter. [5 marks]

Solution

a. The gain of the bi-quad filter is:

$$\mu = \frac{R_3}{R_1} = \frac{4.7\ \text{k}\Omega}{1\ \text{k}\Omega} = 4.7$$

b. The cut-off frequency of the bi-quad filter is:

$$\omega_o = \frac{1}{\sqrt{R_3 R_4 C^2}} = \frac{1}{\sqrt{(4.7\ \text{k}\Omega)(6.8\ \text{k}\Omega)(1\ \mu\text{F})^2}} = 177\ \text{Hz}$$

c. The Q-factor of the bi-quad filter is:

$$Q = \frac{\sqrt{R_3 R_4}}{R_2} = \frac{\sqrt{(4.7\ \text{k}\Omega)(6.8\ \text{k}\Omega)}}{2.2\ \text{k}\Omega} = 2.57$$

9.6.5. State-Variable Filter

State-variable filter is an alternative topology of the Bi-Quad filter. The other name for this filter is Kerwin–Huelsman–Newcomb (KHN) Bi-Quad filter. It consists of three stages e.g. high pass, band pass and low pass and it is made up of an op amp based amplifier and two RC integrators.

In more general state-variable filter model, additional filter orders are possible with more integrators (i.e., more states). Two types of designs of state-variable filter are available e.g. inverting state-variable and non-inverting state-variable filters as shown in the figures below.

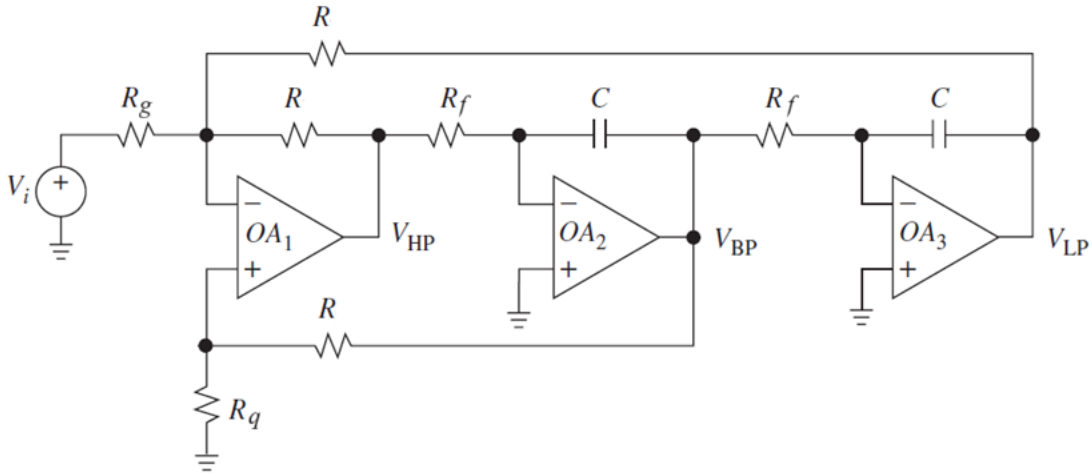

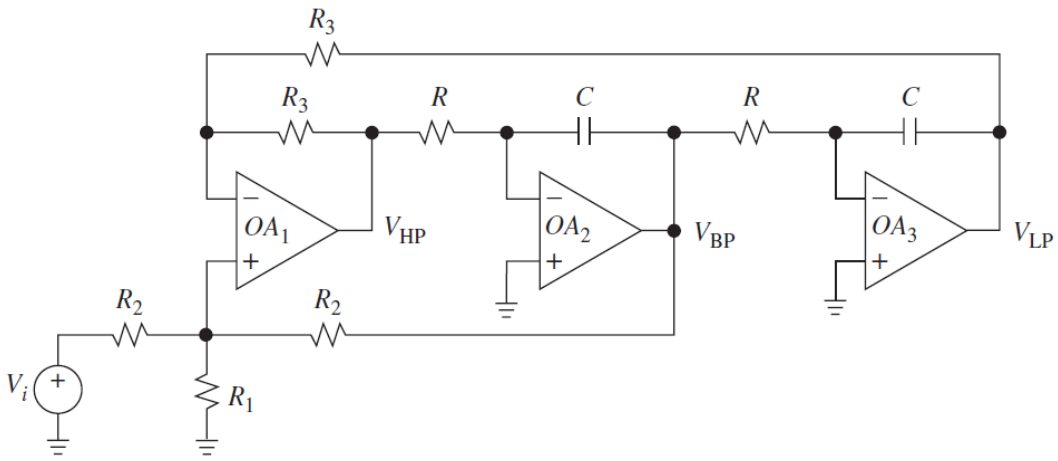

Figure 9.53: Inverting (top) and non-inverting (bottom) state variable filter circuit

The cut-off frequency, Q-factor and gain characteristics of the inverting state-variable filter can be simplified as follow:

$$\omega_0 = \frac{1}{CR_F} \qquad Q = \frac{1}{2}\left(1 + \frac{R}{R_Q}\right) \qquad A_{BP} = \frac{R}{R_G}$$

9.6.6. Multiple Feedback Filter

Multiple feedback filter (MFB) is a type of second-order filter e.g. two-pole. Its primary advantage compared with other examples of analogue filters is reduced sensitivity to component values. It is less prone for problems with tolerance of components used in the filter circuit. The transfer function of multiple feedback filter is:

$$H(s) = \frac{-\frac{1}{C_1 C_2 R_1 R_2}}{s^2 + \frac{1}{C_1}\left(\frac{1}{R_1} + \frac{1}{R_2} + \frac{1}{R_3}\right)s + \frac{1}{C_1 C_2 R_2 R_3}}$$

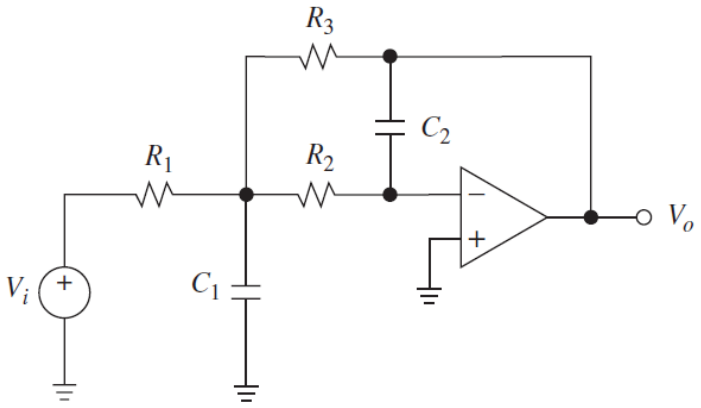

Figure 9.54: Multiple-feedback filter circuit

Considering the standard second-order transfer function:

$$H(s) = \frac{(\omega_0)^2 K}{s^2 + 2\zeta(\omega_0)s + (\omega_0)^2}$$

The Q-factor and attenuation characteristics of the multiple-feedback filter is:

$$Q = \frac{1}{2\zeta} = \frac{2\pi\sqrt{C_1 C_2 R_2 R_3}}{(R_2 + R_3 + |K|R_2)C_2} \qquad \text{and} \qquad K = -\frac{R_3}{R_1}$$

Cut-off frequency of multiple-feedback filter is:

$$\omega_0 = \frac{1}{\sqrt{C_1 C_2 R_2 R_3}}$$

Example for Tutorial 6 – Multiple-Feedback Filter

Given in the figure below is a multiple-feedback (MFB) filter circuit. The filter circuit has these components: R_1 = 1 kΩ, R_2 = 12 kΩ, R_3 = 3.9 kΩ, C_1 = 1 µF, and C_2 = 10 µF. Determine the following parameters of the circuit.

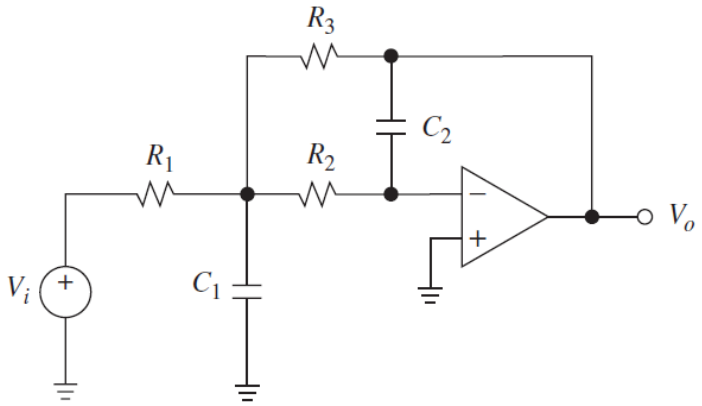

a. Q-factor and attenuation characteristics of the filter. [10 marks]

b. Cut-off frequency of the filter. [5 marks]

Solution

a. The attenuation of the multiple-feedback filter is:

$$K = -\left(\frac{R_3}{R_1}\right) = -\left(\frac{3.9\ \text{k}\Omega}{1\ \text{k}\Omega}\right) = -3.9$$

The Q-factor of the multiple-feedback filter is:

$$Q = \frac{1}{2\zeta} = \frac{2\pi\sqrt{C_1 C_2 R_2 R_3}}{(R_2 + R_3 + |K|R_2)C_2} = \frac{2\pi\sqrt{(1\ \mu\text{F})(10\ \mu\text{F})(12\ \text{k}\Omega)(3.9\ \text{k}\Omega)}}{(12\ \text{k}\Omega + 3.9\ \text{k}\Omega + |-3.9|12\ \text{k}\Omega)(10\ \mu\text{F})} = 0.217$$

b. The cut-off frequency of multiple-feedback filter is:

$$f_0 = \frac{1}{2\pi\sqrt{C_1 C_2 R_2 R_3}} = \frac{1}{2\pi\sqrt{(1\ \mu\text{F})(10\ \mu\text{F})(12\ \text{k}\Omega)(3.9\ \text{k}\Omega)}} = 7.36\ \text{Hz}$$

Appendix – Standard Analogue Filter Circuit Parameters

Order	Roll-Off dB/Decade	1st Stage			2nd Stage			3rd Stage		
		Poles	DF	R_1/R_2	Poles	DF	R_1/R_2	Poles	DF	R_1/R_2
1	-20	1	Optional							
2	-40	2	1.414	0.586						
3	-60	2	1.00	1	1	1.00	1			
4	-80	2	1.848	0.152	2	0.765	1.235			
5	-100	2	1.00	1	2	1.618	0.382	1	0.618	1.382
6	-120	2	1.932	0.068	2	1.414	0.586	2	0.518	1.482