VICTORIA UNIVERSITY OF WELLINGTON
TE HERENGA WAKA

# Review for Exam

## XMUT303 Analogue Electronics

# Final Exam

- 2 hours (4-5 sections, 20-25 marks each)
- Descriptive, analytical & design questions:
    - Section 1: Operational amplifier (internal, static and dynamic limitations and stability).
    - Section 2: Op amp circuits and applications (amplifier, rectifier, comparator, oscillator, and filter).
    - Section 3: Power amplifier, power supplies, and transformer and inductor.
    - Section 4: Noise and thermal analysis.

# Tips for Revision

Expect 3 types of question in exam:

- Explain…

  a. Two common classes of operational amplifiers use BJTs and JFETs as their input devices. Explain why you would choose one or the other. [5 marks]

# Tips for Revision

- Calculate…

  b. Show that the output voltage, $v_O$, can be expressed in terms of the input voltages, $v_1$ and $v_2$, as:

[5 marks]

$$V_o = -\frac{R_2}{R_1}V_1 + \frac{(R_1 + R_2)R_4}{(R_3 + R_4)R_1}V_2$$

- Design…

  c. Design and sketch an external nulling circuit to remove the expected offset error.

[10 marks]

# List of Topics

- Operational amplifier.
- Op amp internals.
- Op amp stability and compensation.
- Op amp circuits and applications.
- Power amplifiers.
- Power supplies.
- Transformers/inductors.
- Thermal analysis.
- Noise analysis.

# 0. Laboratories

- Amplifiers, integrator, differentiators, filters, summer, converters.
- Measuring $Z_{in}$, $Z_{out}$, frequency response.
- Colour & numerical codes for passive devices.
- PSU, function generator, oscilloscope, multimeter,  breadboard operation.

# 1. Op Amp Circuits

- Nodal analysis - $A_v$, $Z_{in}$, $Z_{out}$.
- Differential vs common mode.
- Circuit topologies.

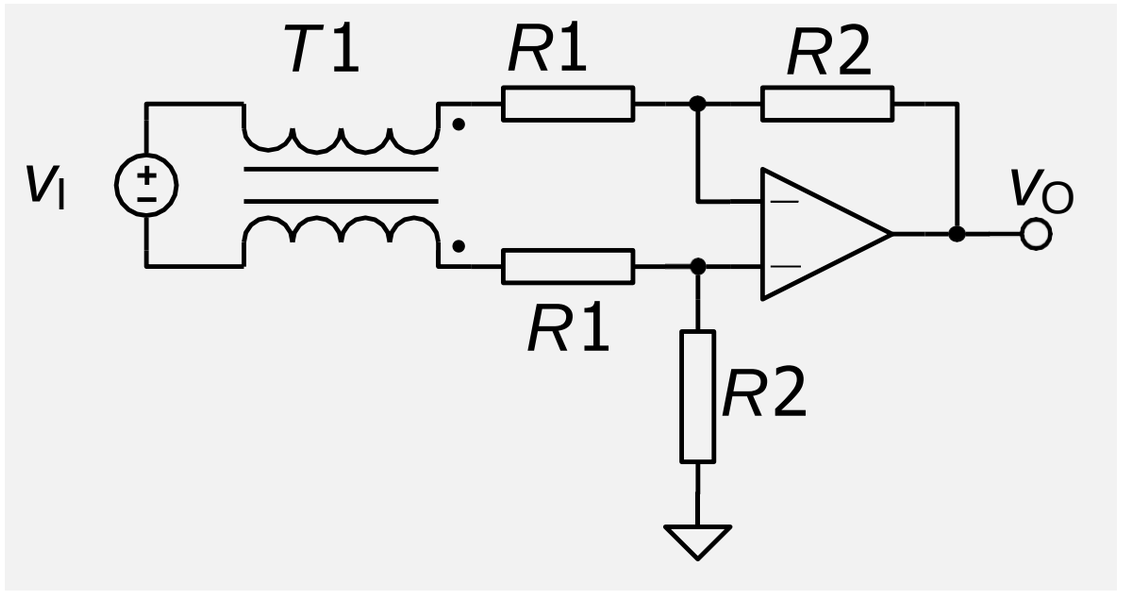


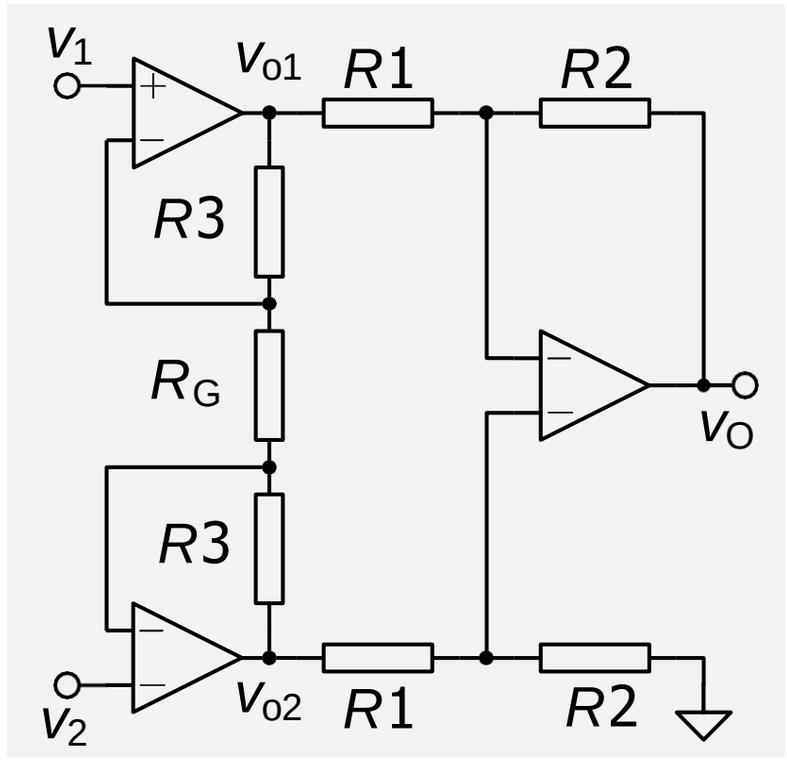

# 2. Op Amp Internals

- Op amp internals.
- Static imperfections.
- Dynamic imperfections.
- Nulling.

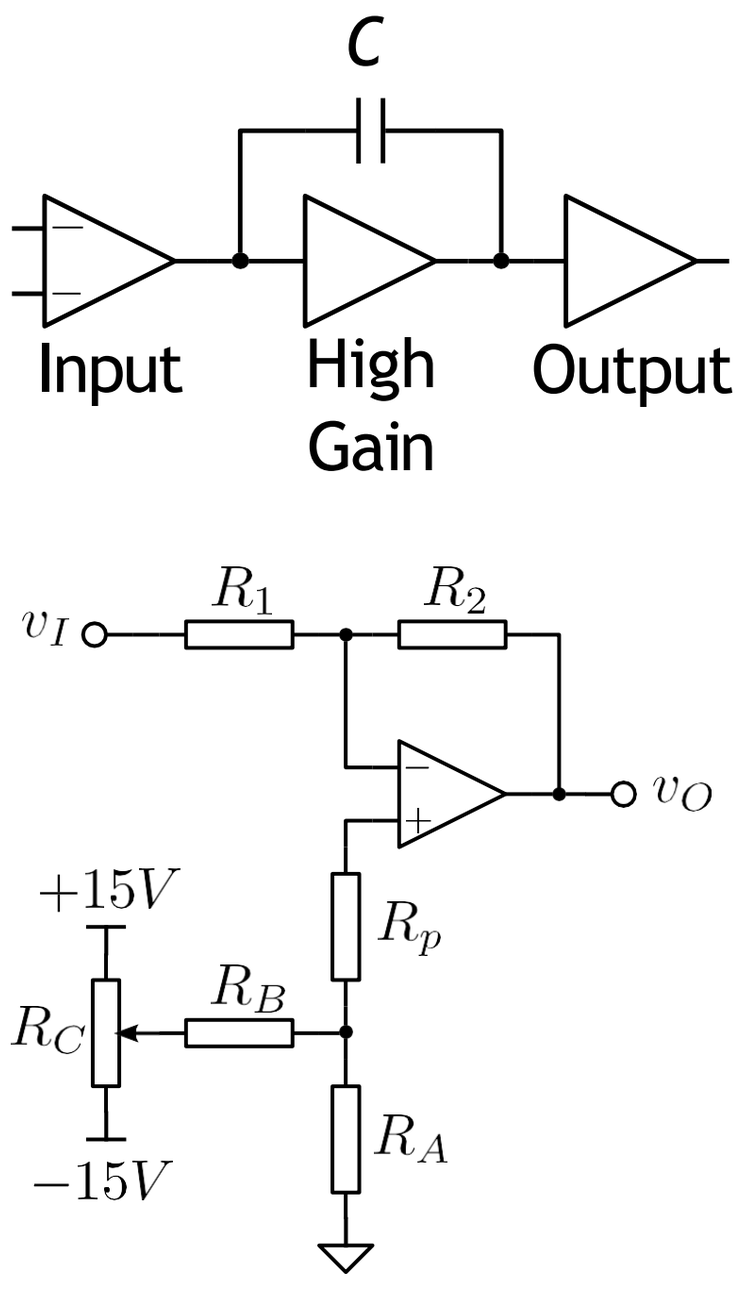

# 3. Op Amp Stability and Compensation

- Feedback.
- ROC, peaking, ringing, etc.
- Compensation.
- Loading.

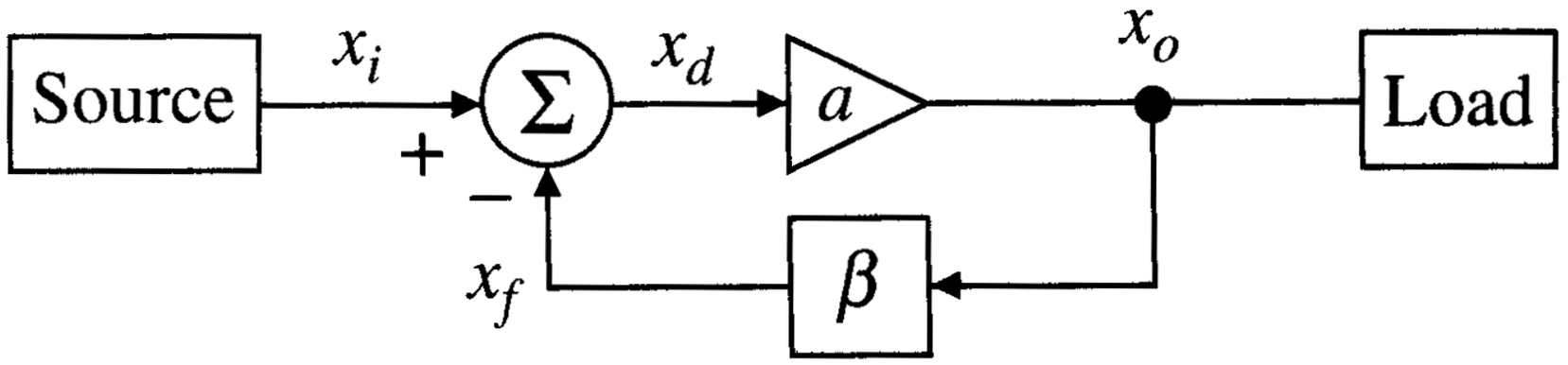

# 4. Op Amp Circuits

Op amp amplifiers:

- Voltage follower.
- Inverting/non-inverting.
- Summing.
- Difference.
- Differentiator/integrator.
- Instrumentation.
- Trans-impedance.
- Lock in.

# 5. Op Amp Applications

Op amp applications:

- Rectifier.
- Comparator.
- Oscillator.

# 5.1. Rectifier

- Waveform rectification.
- Half-wave rectifier.
- Full-wave rectifiers.

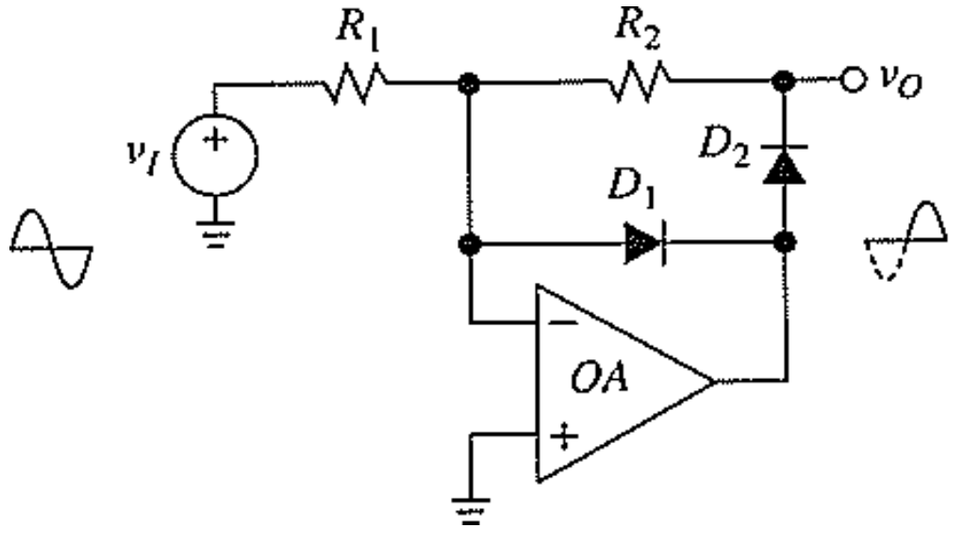


- Precision peak detector.

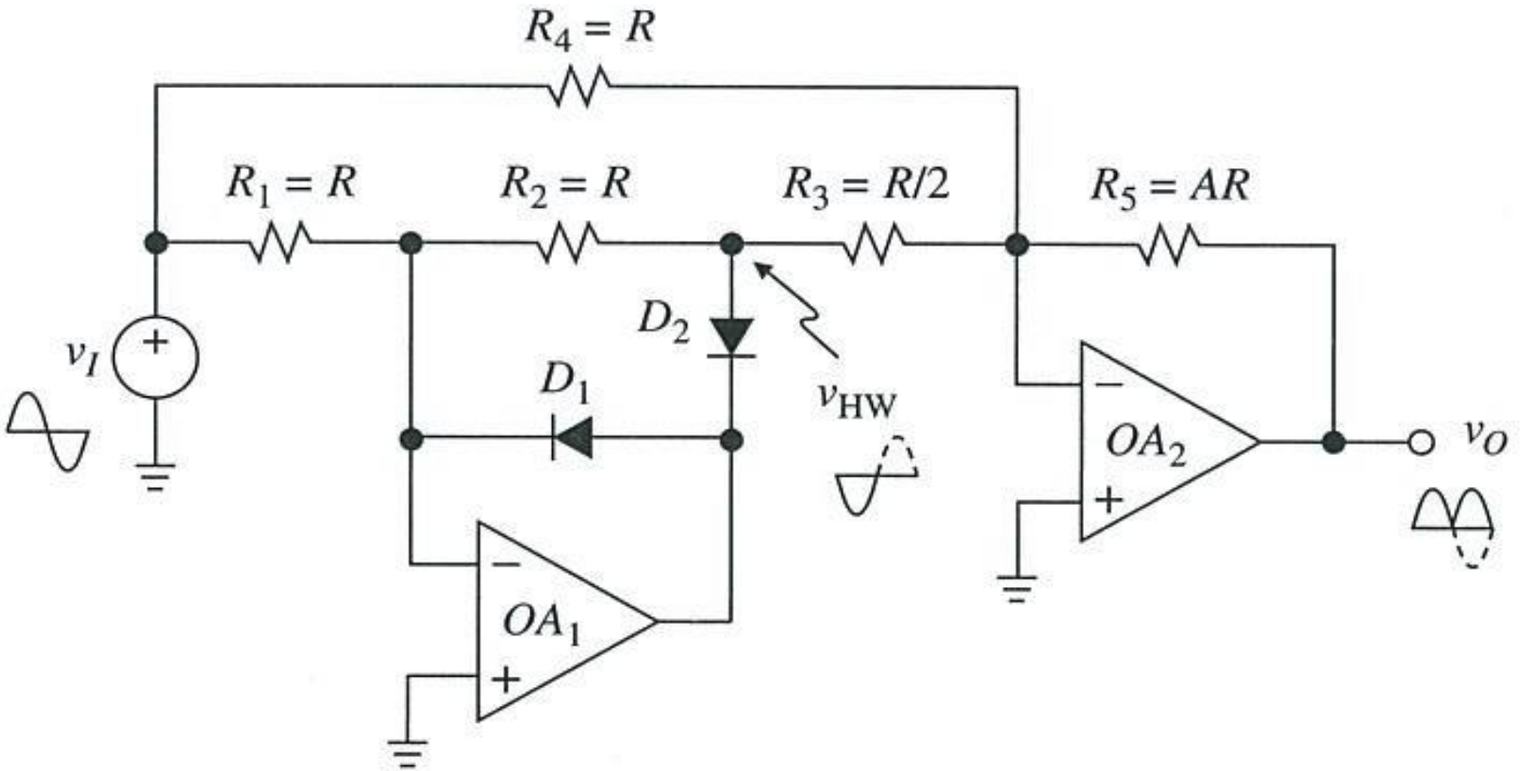

# 5.2. Comparators

- Voltage comparison.
- Response time.
- Applications.
- Hysteresis.
- Schmitt trigger.
- Non-inverting Schmitt trigger.

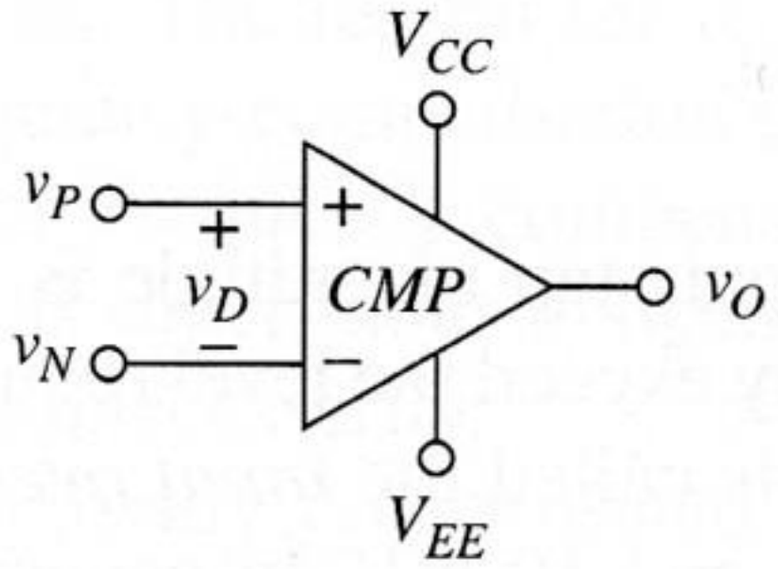


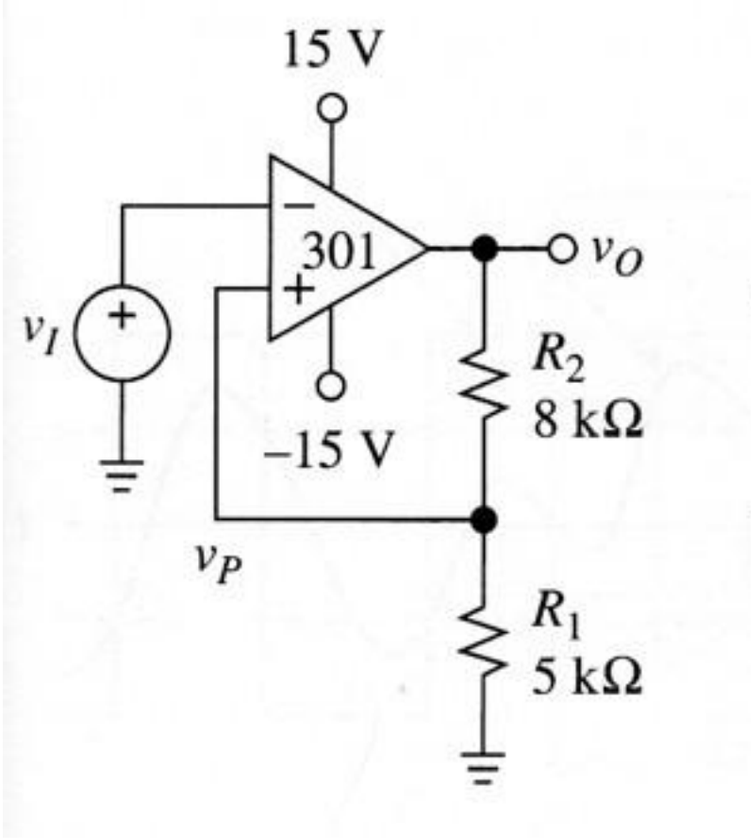

# 5.3. Oscillators

- Barkhausen criterion.
- Wien-Bridge oscillators.
- Phase-shift oscillators.

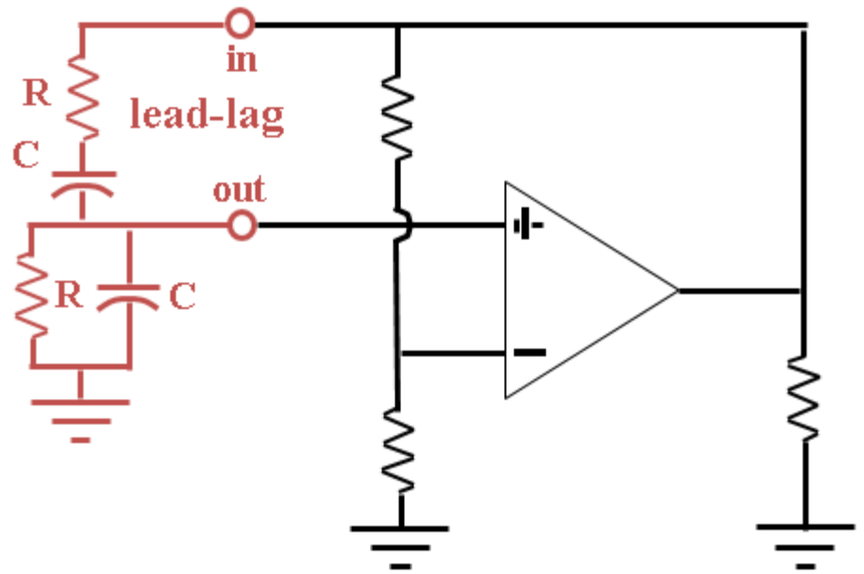


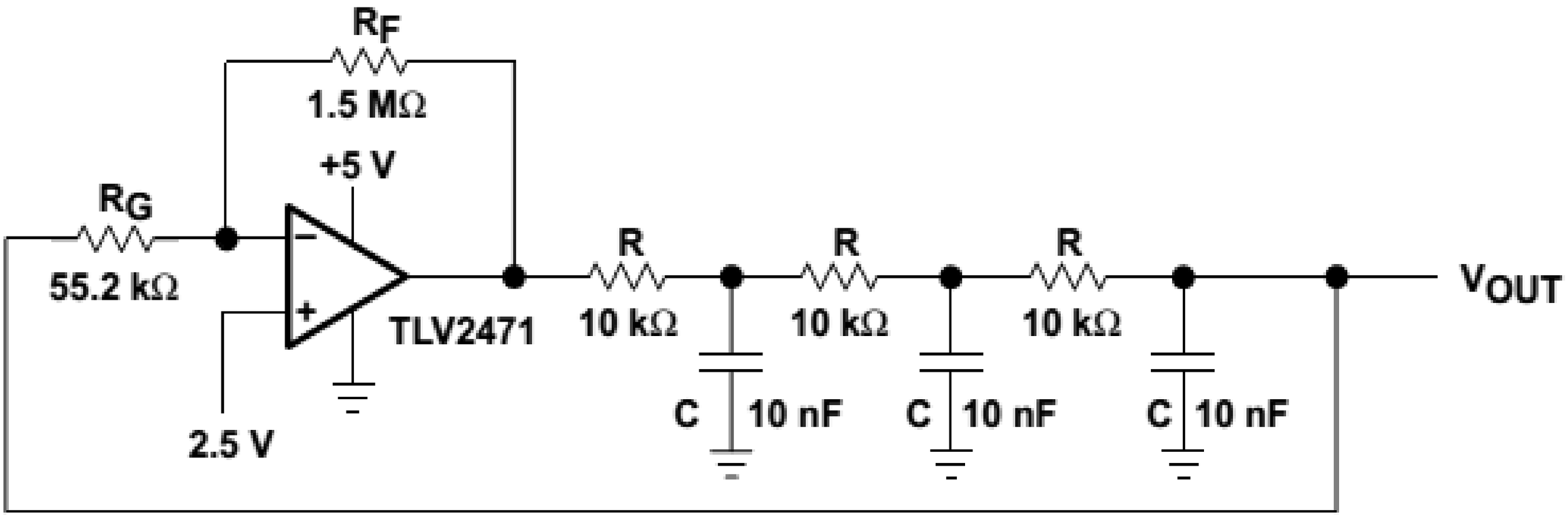

# 6. Filters

- Transfer functions.
- Bode, PZ plots.
- 2nd order RLC topologies.
- Active filters.
- Sensitivity, Q-factor.
- Standard responses.

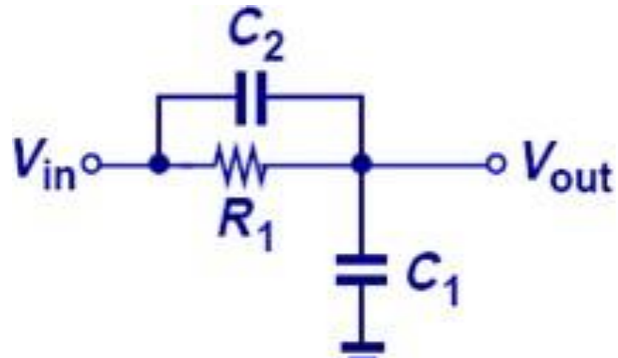


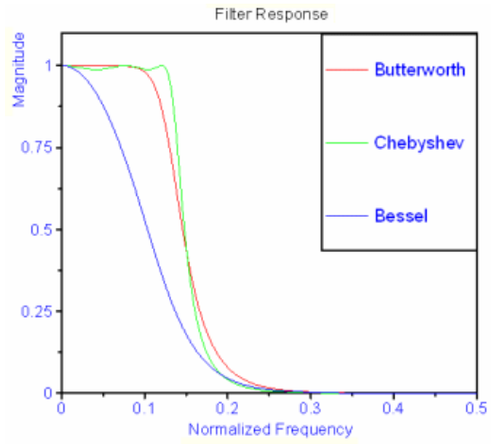

# 7. PowerAmplifiers

Class A, B, AB, C, D Power Amplifiers:

- Efficiency.
- Biasing.
- Operation.
- Topologies.

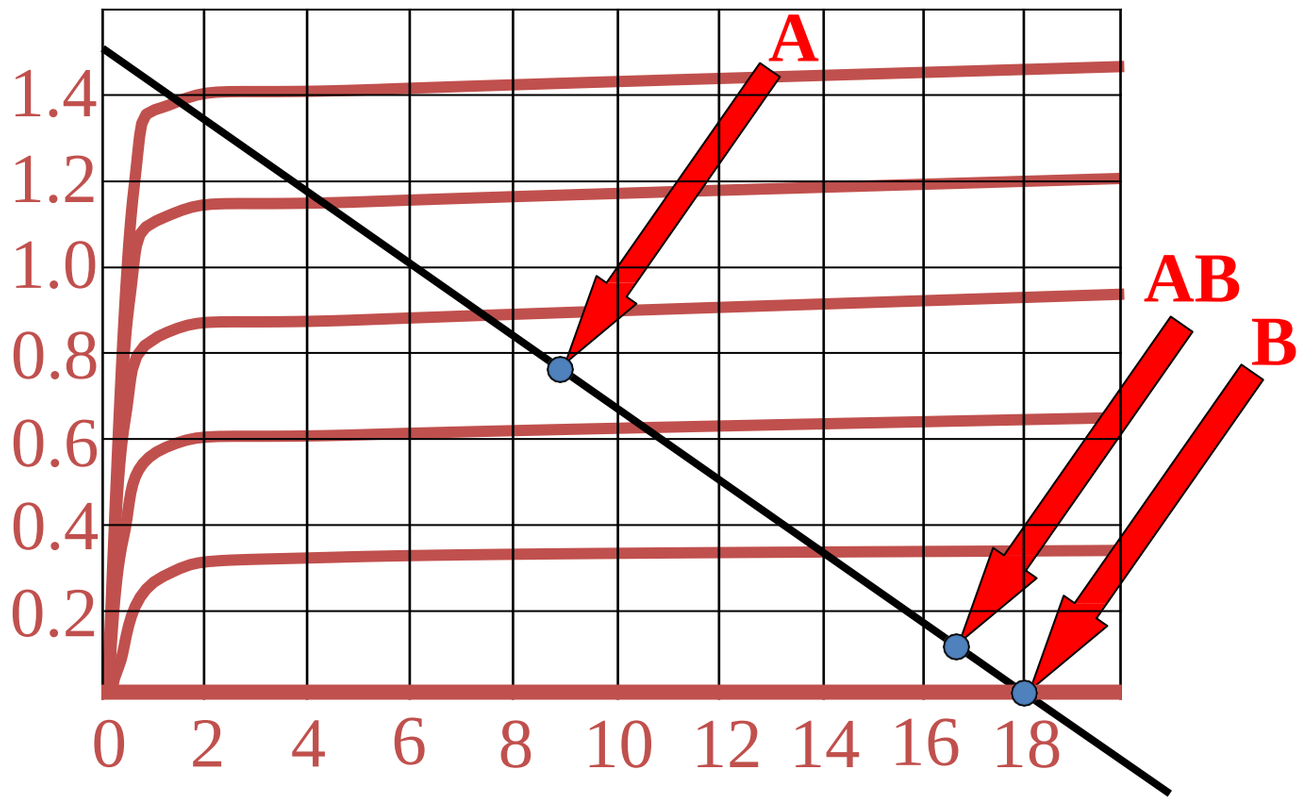

# 8. Power Supplies

Linear voltage regulators:

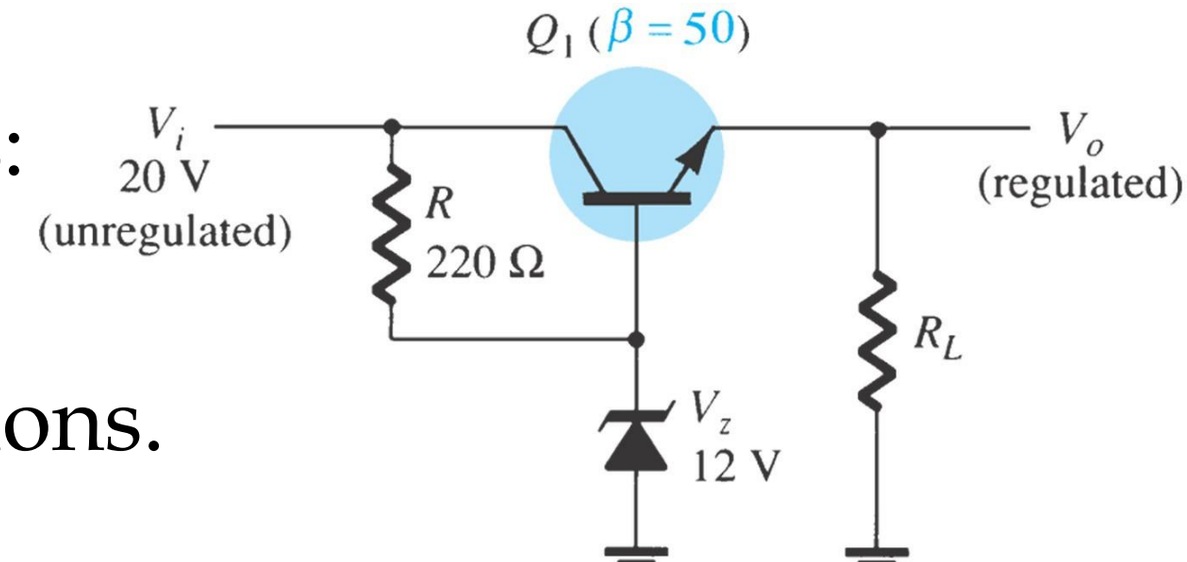


- Line & load regulations.
- Series & shunt regulators.
- Zener diode regulators.
- Variable voltage regulators.

# 8. Power Supplies

Switching voltage regulators:

- Topologies:
  - Buck, Boost,Buck-Boost, etc.
- Characteristics:
  - Switching frequency, ripple, efficiency, etc.

# 9. Transformers/Inductors

- Turns ratio.

- Current,voltage, impedance, etc.

- Designs of transformer and inductor.

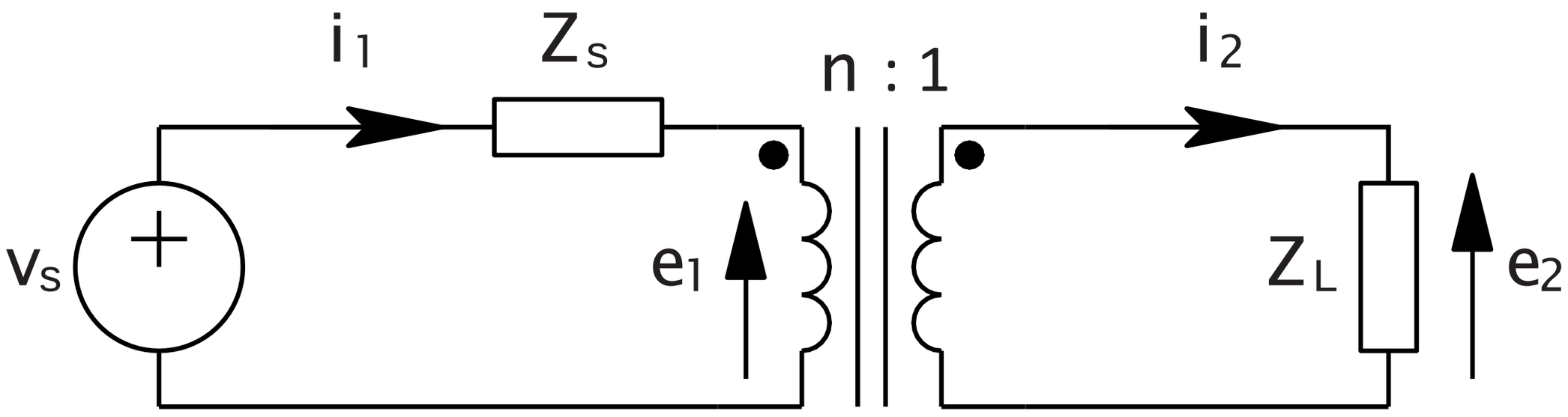

# 10. Thermal Analysis

- Effects of heat.
- Ohm's law for heat.
- Thermal resistivity.
- Heat sinks.
- Thermal analysis of electronic devices.

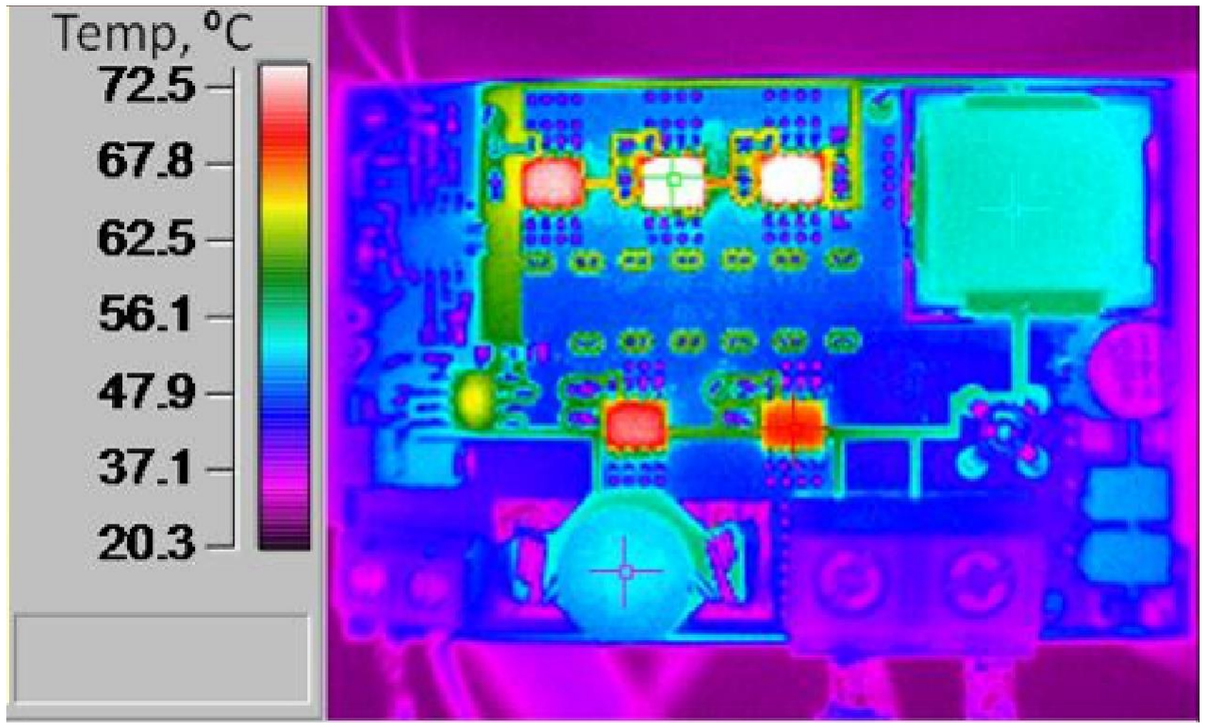

# 11. Noise Analysis

- Noise properties.
- Spectra of noise.
- Sources of noise.
- Elimination of noise.
- Noise analysis in op amp circuits.

