XMUT303 Analogue Electronics

Final Exam Revision Questions

A. Operational Amplifier

1. Given in the figures shown below (a) a non-inverting amplifier and (b) a circuit model for its analysis.

   a. Derive an expression for the output voltage V_O of the amplifier with a finite op amp open loop gain (a). [10 marks]

   b. Let V_I = 1 V, R_1 = 2 kΩ, and R_2 = 18 kΩ. Find V_O if:

      i. Gain a = 10^2 V/V. [2 marks]

      ii. Gain a = 10^4 V/V. [2 marks]

      iii. Gain a = 10^6 V/V. [2 marks]

   c. Comment on your findings in part (b). [2 marks]

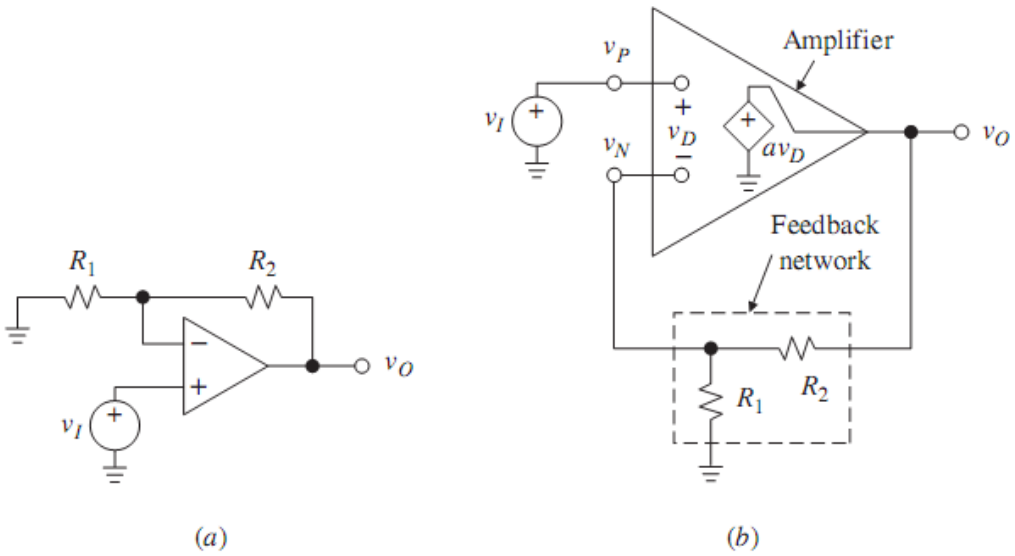

(a) (b)

2. Given in the figure below is an internal schematic of LM741 op amp.

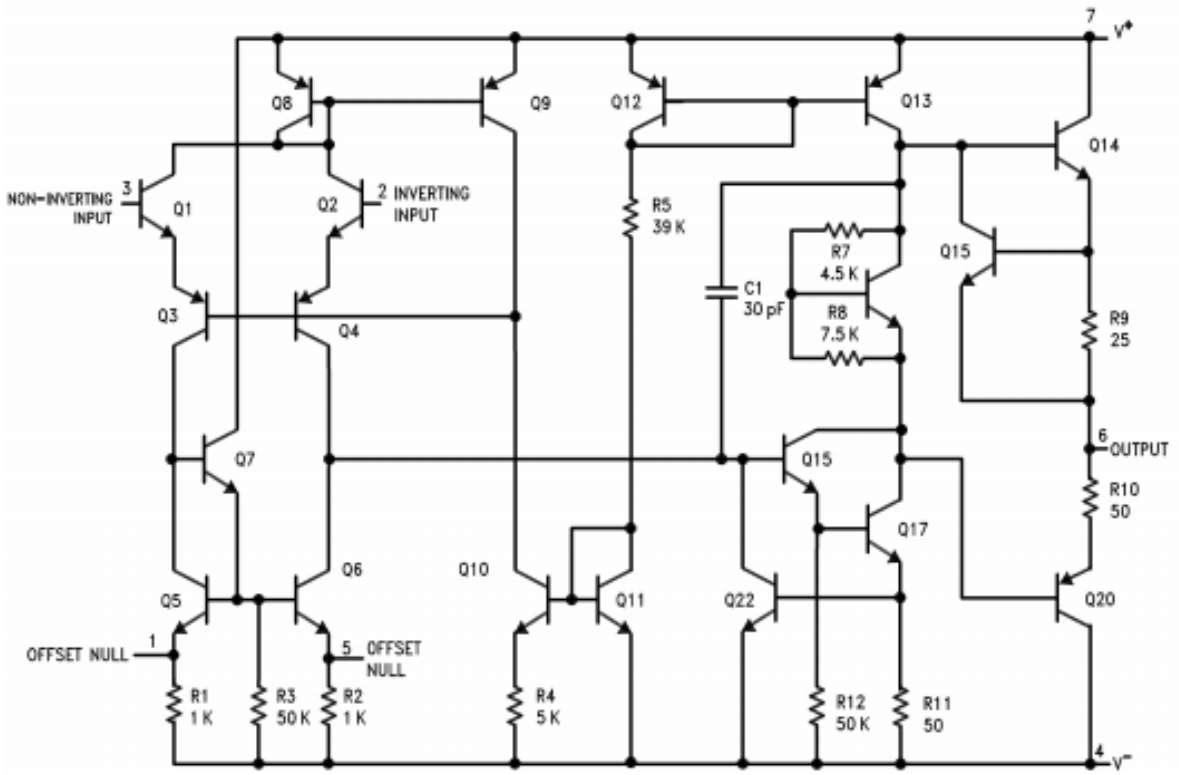

a. Describe the main features of inside the op amp internal circuit. [4 marks]

b. What is the role of capacitor C_1 in the circuit? [2 marks]

B. Op Amp Analysis

3. For a given practical non-inverting amplifier given in the figure below:

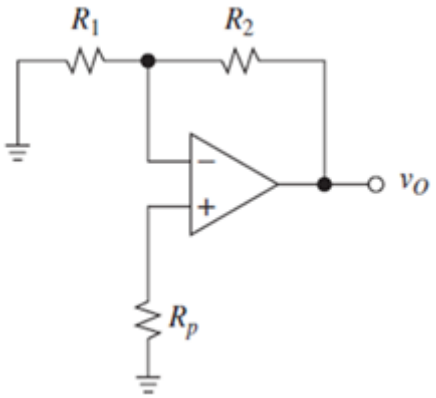

a. What is input offset voltage in the op amp? [2 marks]

b. Derive the equation for determining the output voltage of the amplifier. Take into account the typical offset voltage and bias current that exist in the op amp circuit. [16 marks]

c. Describe how bias current causes errors in the amplifier circuit. [4 marks]

4. In case of ADA4004 op amp with its GBP is 12 MHz, the frequency response of the given op amp is shown below (note that measurement is taken when supply voltage V_{supply} is ± 15 V).

a. Determine the bandwidth of the op amp at a gain of 1. [2 marks]

b. Calculate the bandwidth of the op amp if the open loop gain is 500,000 maximum. [2 marks]

c. Define the full-power bandwidth of the op amp. Determine full power bandwidth of the ADA4004 op amp if its slew rate is 2.7 V/μs and a closed loop gain of 100. [2 marks]

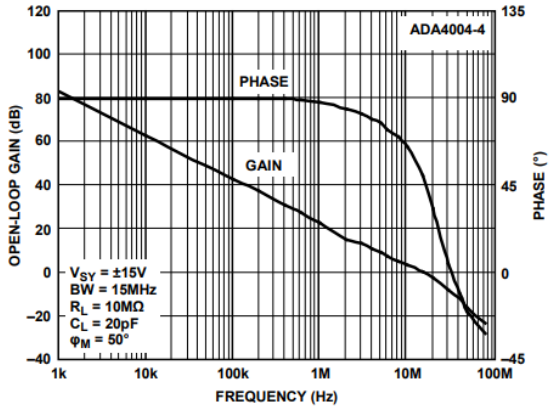

Open-Loop Gain and Phase vs. Frequency

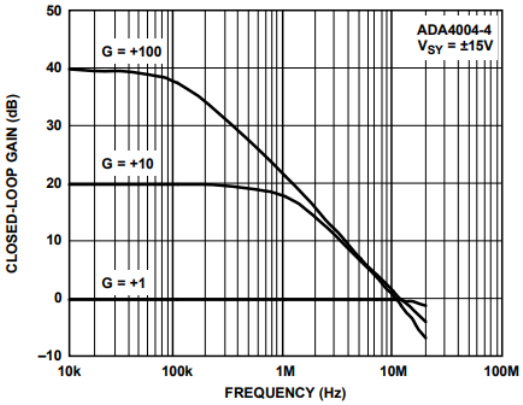

Closed-Loop Gain vs. Frequency

5. For a given differentiator circuit as shown below, its rate of convergence (ROC) by design is found to be 40 dB/decade.

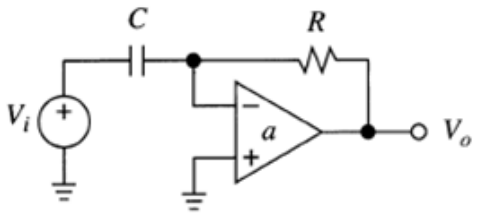

a. What is rate of convergence (ROC)? [2 marks]

b. Design a pole compensation that will stabilize the given differentiator circuit. [4 marks]

c. Determine the value of compensating resistor as in part (a) if R = 10 kΩ, the frequency of pole compensation is 100 kHz and the open loop bandwidth of the op amp is 2 MHz. [4 marks]

C. Op Amp based Circuits

6. In the figure below is a precision half-wave rectifier circuit. It consists of non-inverting amplifier with diode D_1 in the feedback loop of an op-amp.

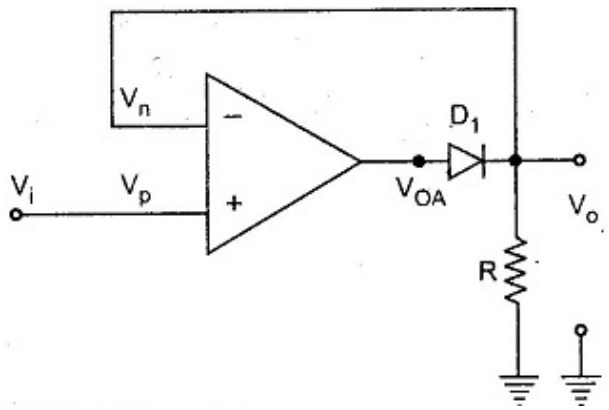

   a. Describe why the op-amp based rectifier circuit provides a more precise rectification compared with diode-based rectifier circuit. [4 marks]

   b. Describe the operation of the given circuit. The analysis of this circuit can be done considering two distinct cases of $V_i > 0$ V and $V_i < 0$ V. [4 marks]

   c. Draw the waveform of the input and output of the circuit and also the output voltage-input voltage transfer function graph of its operation. [2 marks]

7. Referring to the on-off temperature controller circuit of figure given below, specify suitable resistances so that the set point can be adjusted anywhere between 50°C and 100°C by means of a 5 kΩ potentiometer. From datasheet of LM335, its temperature coefficient is given as 10 mV/°K (note: that for temperature conversion 0°K = 273.2°C).

   The circuit is designed as a comparator circuit using an op amp that drives a power transistor (LM395) for turning on and off of the heater. Notice also the roles of Zener diode (LM335) that provides reference voltage and Zener diode (LM329) for limiting the voltage range. The variable resistor R_2 is provided for fine tuning of the voltage setting of the comparator circuit.

   [10 marks]

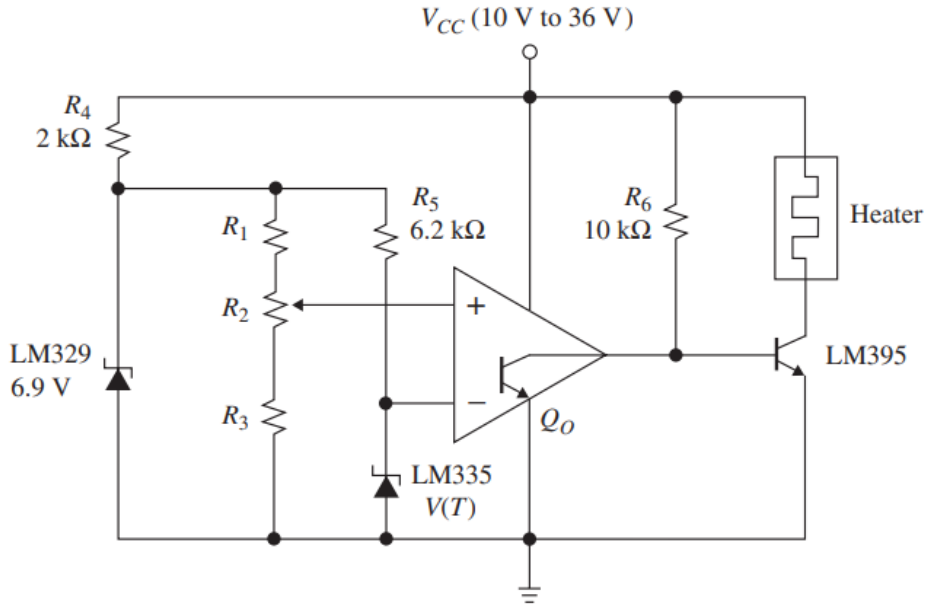

8. Given in the figure below is a typical Schmitt trigger circuit along with its voltage transfer characteristic graph.

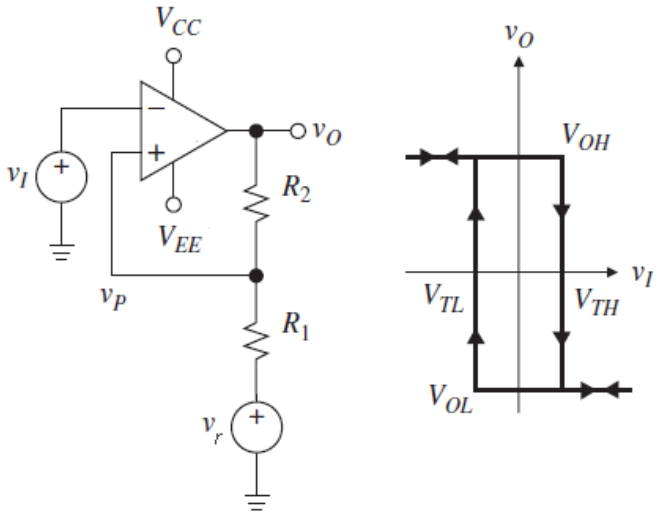

a. Given the output voltage saturated to the supply voltage $= \pm 10$ V. Derive the equations for high-threshold and low-threshold values for V_{TL} = 2 V and V_{TH} = 3 V. [6 marks]

b. Specify suitable resistances of the resistors (R_1 and R_2) and reference voltage (V_r). [24 marks]

9. For a given Wien-Bridge oscillator circuit as shown below.

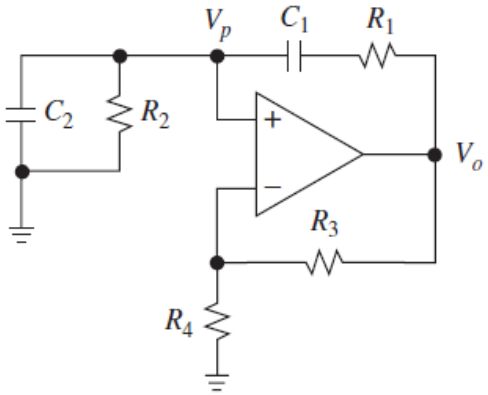

a. Determine the values of the components of the oscillator circuit when frequency of the oscillator f = 1 kHz and if the value of the capacitor is assumed to be 10 pF. Use E24 values standard (see Appendix). [6 marks]

b. Determine the values of the resistors R_3 and R_4. [4 marks]

10. Given in the figure below is a single amplifier phase shift oscillator circuit. The oscillator circuit is realised with TLV2471 op amp and relevant resistors and capacitors for amplifier and RC sections circuits.

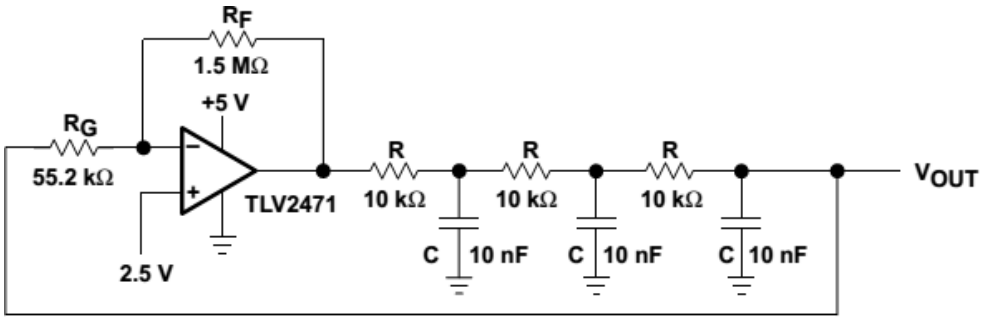

a. Describe the advantage of this type of oscillator compared with Wien-Bridge oscillator. [2 marks]

b. What is the phase angle for each of the RC section in the oscillator? Determine the frequency of oscillation for the above oscillator circuit. [4 marks]

c. Determine the gain of the oscillator to ensure constant amplitude oscillation. [6 marks]

D. Analogue Filter

11. Given in the figures below are an RC filter circuit and its frequency response plot with the output voltage of the filter circuit is taken across capacitor C_2. Selected values of the plots taken from the circuit measurements in the lab are also listed in the table below.

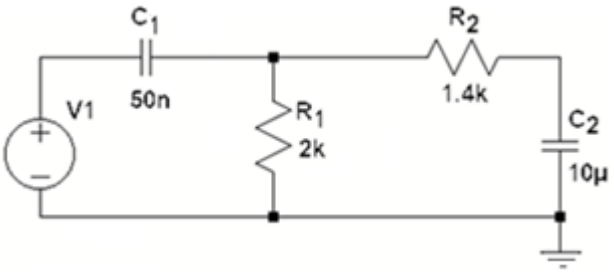

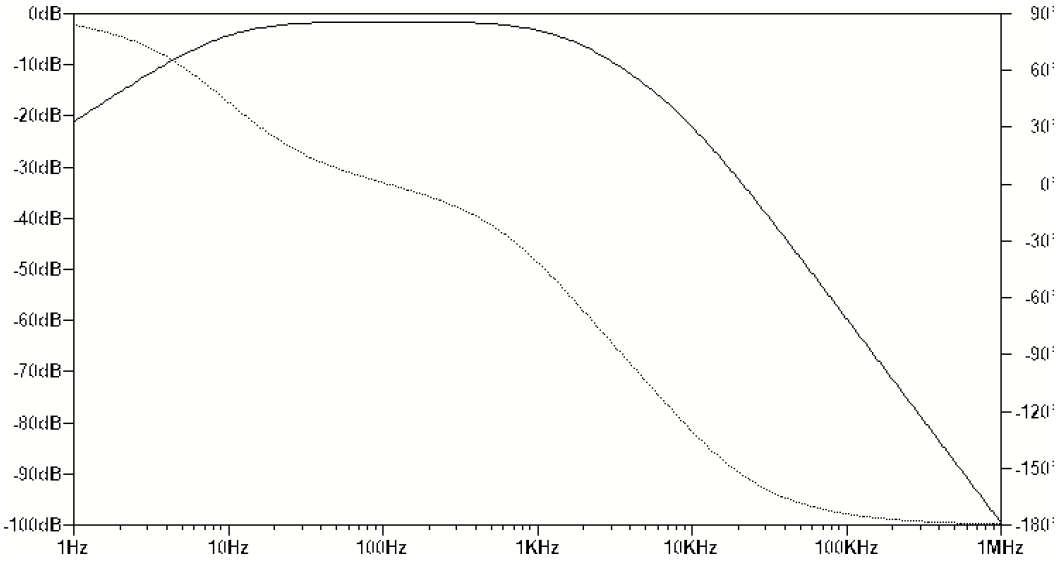

Frequency (Hz)	Gain (dB)	Phase (degree)
9.5	-4.5	45
15	-3	32
109	-1.5	0
910	-3	-38
1.1 k	-3.6	-45
1.4 k	-4.5	-53

a. Calculate the cut-off frequency of the filter circuit above. [4 marks]

b. From the table and graph, find the high-pass cut-off frequency for this filter is. [2 marks]

c. Explain the difference between the calculated and the measured values. [2 marks]

12. For a given active filter shown in the figure below, perform the following tasks.

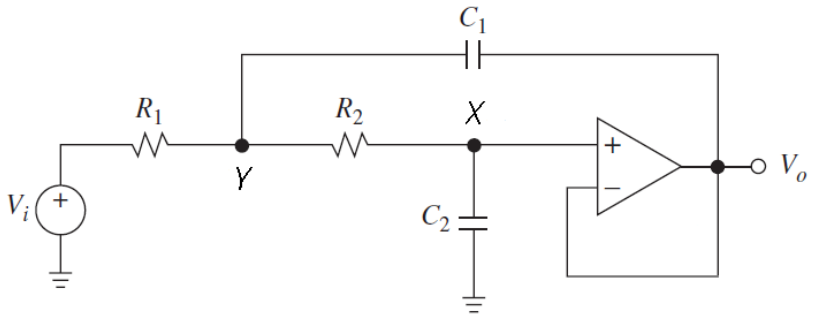

a. If an active filter used for attenuating signal application, which of the standardized filter design e.g. Butterworth, Bessel, and Chebyshev will be best to realize a stop band filter. Give a reason for your answer. [2 marks]

b. Compare passive and active filters. Give an advantage for each and state applications where each type of filter is particularly well suited. [5 marks]

c. Calculate the cut-off frequency and Q-factor for the low-pass filter shown in figure given above, where R_1 = 1600 Ω, R_2 = 400 Ω, C_1 = 40 nF, and C_2 = 10 nF. [10 marks]

13. Given in the following figure is a state-variable filter circuit.

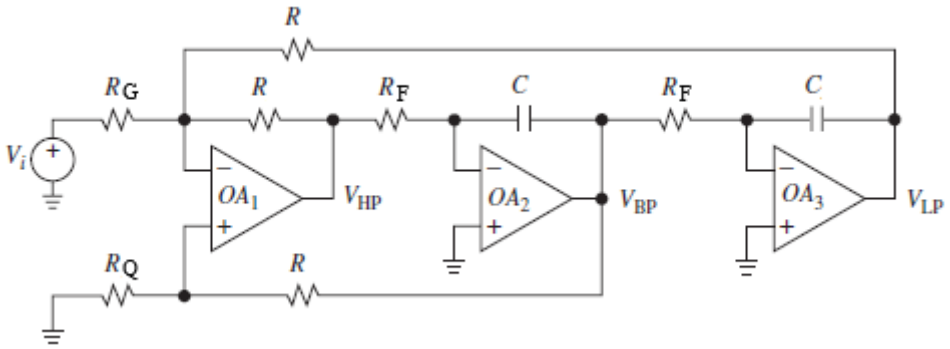

a. Describe Q-factor of an analogue filter. [4 marks]

b. Determine the high-level components that make up the state-variable filter circuit. [2 marks]

c. Determine the characteristics of the state-variable filter e.g. cut-off frequency, Q-factor and gain of the band-pass filter implementation of the state-variable filter when values of $=$ 10 nF, $R_F = 10$ kΩ, $R = 10$ kΩ, $R_Q = 5$ kΩ, and $R_G = 2.2$ kΩ. [6 marks]

14. The circuit in the figure given below is a multi-feedback filter.

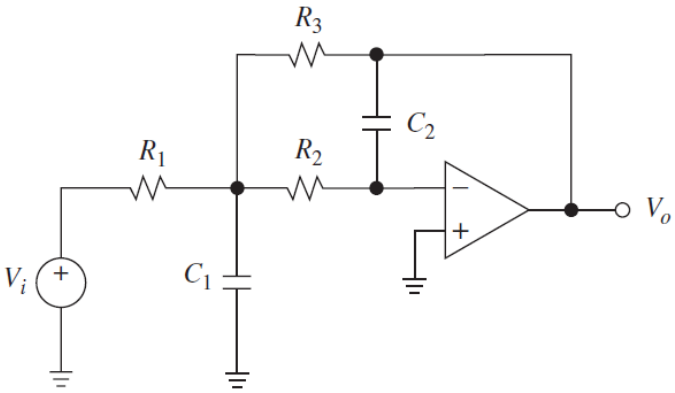

a. Describe the characteristics of this type of filter compared with other active filter examples e.g. Sallen-Key filter, state-variable filter, etc. [2 marks]

b. Calculate the cut-off frequency of this filter when the values of resistors are $R_1 = 1\ \text{k}\Omega$, $R_2 = 1\ \text{k}\Omega$, $R_3 = 10\ \text{k}\Omega$ and the values of the capacitors are $C_1 = 1\ \text{nF}$ and $C_2 = 10\ \text{nF}$. [2 marks]

c. Determine the Q-factor characteristic of the filter. [4 marks]

15. Given in the figure below is a fourth-order filter derived from two multi feedback (MFB) filter circuit.

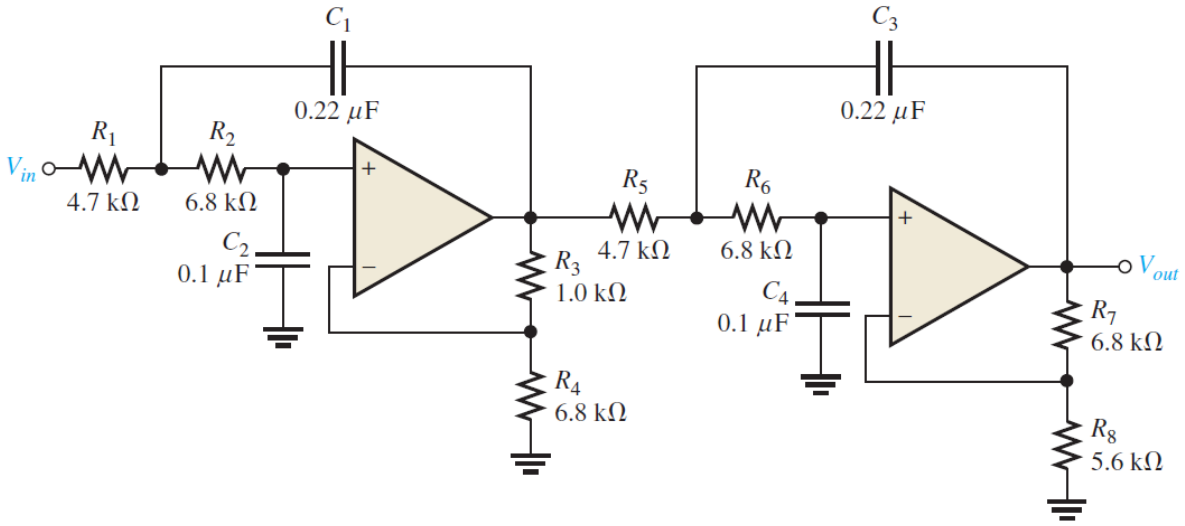

a. By using the table of standard Butterworth response filter design specification given below, is the four-pole filter approximately optimised for a Butterworth response? What is its roll-off rate? [10 marks]

Order	Roll-Off dB/Decade	1st Stage			2nd Stage			3rd Stage		
		Poles	DF	R_1/R_2	Poles	DF	R_1/R_2	Poles	DF	R_1/R_2
1	-20	1	Optional							

2	-40	2	1.414	0.586						
3	-60	2	1.00	1	1	1.00	1			
4	-80	2	1.848	0.152	2	0.765	1.235			
5	-100	2	1.00	1	2	1.618	0.382	1	0.618	1.382
6	-120	2	1.932	0.068	2	1.414	0.586	2	0.518	1.482

b. Determine the critical frequency of the filter. [4 marks]

c. Without changing the response curve, adjust the component values in the filter to make it an equal-value components filter. Select C = 0.22 µF for both stages and use E24 component standard (see Appendix). [10 marks]

E. Power Amplifier

16. You are given a Class A amplifier circuit as shown below. For the given amplifier circuit, determine and calculate the following:

    a. Q-point of the amplifier. [6 marks]

    b. Input power. [8 marks]

    c. Output power. [2 marks]

    d. Efficiency of the amplifier circuit for an input voltage that results in a base current of 10 mA (peak). [2 marks]

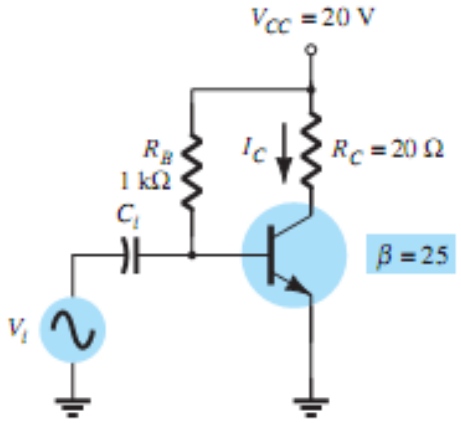

17. You are given a Class B amplifier circuit below that provides a 20-V peak signal to a 16 Ω load (speaker) and requires a power supply of V_{CC} = 30 V.

    a. Briefly describe, with the aid of diagrams, two methods that can be used to reduce the crossover distortion of a Class B amplifier. [4 marks]

b. Determine the input power, output power, and circuit efficiency of the amplifier. [10 marks]

c. Determine the amplifier's maximum input power, output power, and transistor dissipation. [10 marks]

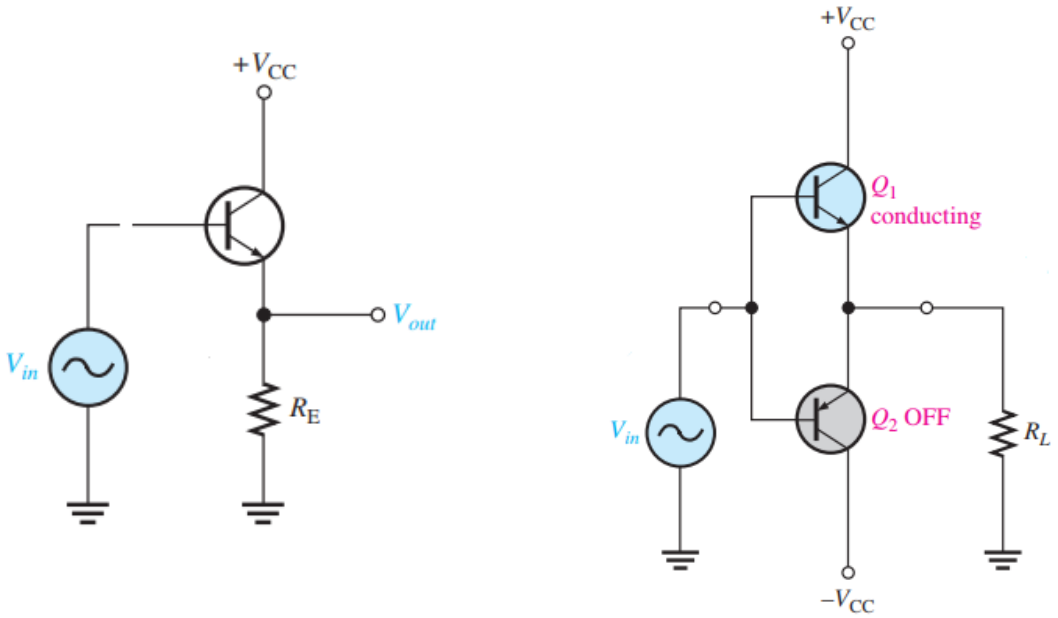

Note: Class B amplifier (left) and push-pull Class B amplifier (right).

F. Power Supply

18. In the electronic laboratory you are tasked to test a power supply circuit. With given testing equipment set up as shown below, you managed to take some measurements from the circuit.

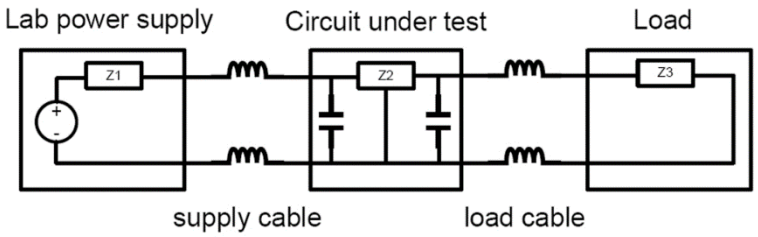

a. Using a DC and AC voltmeter to measure the output signal from a filter circuit, readings of 25 V DC and 1.5 V rms are observed in the DMM. Calculate the ripple of the filter output voltage. [2 marks]

b. A DC voltage supply provides 60 V when the output is unloaded. When connected to a load, the output drops to 56 V. Calculate the value of voltage regulation. [2 marks]

c. Calculate the ripple voltage of a full-wave rectifier with a 100-mF filter capacitor connected to a load drawing 50 mA. [2 marks]

d. If the peak rectified voltage for the filter circuit is 30 V, calculate the filter DC voltage. [4 marks]

e. Calculate the ripple of a capacitor filter for a peak rectified voltage of 30 V, capacitor C = 50 mF, and a load current of 50 mA. [2 marks]

f. If the RC filter section has R = 120 Ω, C = 10 mF, calculate the DC voltage across a 1 kΩ load when the DC voltage across the initial filter capacitor is V_{dc} = 60 V. [2 marks]

19. You are given a set of components for constructing a linear regulator in the laboratory. You are given two contrasting options to set up the regulator: linear series regulator and shunt regulator.

a. Calculate the output voltage and the Zener current in the series regulator circuit given below for R_L = 1 kΩ. [12 marks]

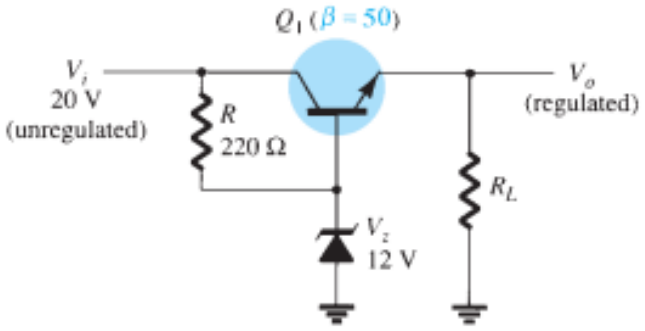

b. Determine the regulated voltage and circuit currents for the shunt regulator given below. [10 marks]

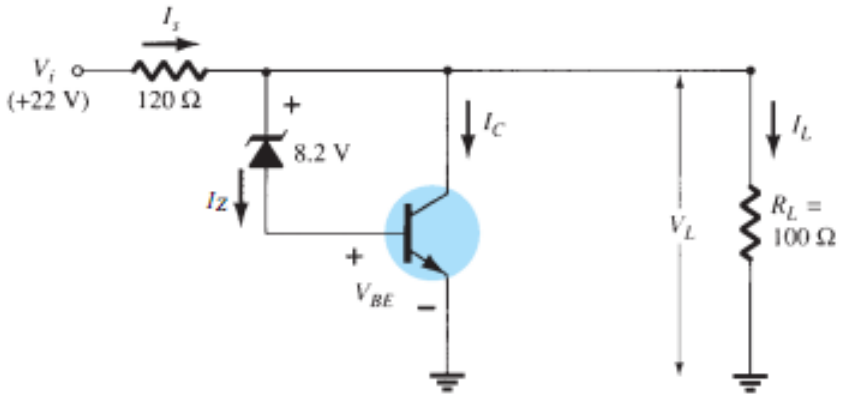

c. Compare the performance of series linear regulator with the shunt linear regulator. [4 marks]

20. You are given a task to design a power supply unit that will have its input from 120 V (rms) AC supply and using 7805 series linear voltage regulator integrated circuit.

a. Draw a voltage supply using a full-wave bridge rectifier, capacitor filter, and the given IC regulator to provide an output of +5 V. [4 marks]

b. For a transformer output of 15 V and a filter capacitor of 250 mF, calculate the minimum input voltage when connected to a load drawing 400 mA. [10 marks]

c. Determine the maximum value of load current at which regulation is maintained. [6 marks]

Note: The tables given below provide some information on the input voltage minimum requirement for given output voltage of the positive and negative voltage regulators of the 7800 and 7900 series.

IC Part	Output Voltage (V)	Minimum V_i (V)
7805	+5	7.3
7806	+6	8.3
7808	+8	10.5
7810	+10	12.5
7812	+12	14.6
7815	+15	17.7
7818	+18	21.0
7824	+24	27.1

IC Part	Output Voltage (V)	Minimum V_i (V)
7905	−5	−7.3
7906	−6	−8.4
7908	−8	−10.5
7909	−9	−11.5
7912	−12	−14.6
7915	−15	−17.7
7918	−18	−20.8
7924	−24	−27.1

21. You are given a task to design a switching mode power supply.

a. Sketch the control part circuit diagram of a switching-mode buck converter power supply and briefly explain how it operates. [6 marks]

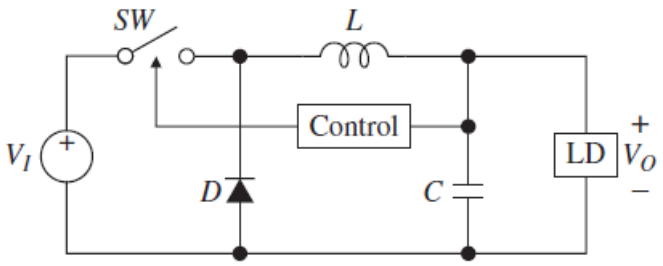

b. List one advantage and one disadvantage of using switching-mode power supplies. Explain your reasoning. [4 marks]

c. The design specifications of a Buck converter are listed below:

- The converter is a 12 V power source to an output of 5 V and 2 A load.
- The switching frequency is selected at 400 kHz.
- The current ripple will be limited to 30% of maximum load.

Determine the converter's duty cycle ratio, ripple current and inductance of the inductor. [6 marks]

d. Compare at least two advantages and disadvantages between Buck and Boost converters. [4 marks]

22. Design a transformer operating at input voltage of 230-V (rms) 50 Hz and output voltage of 18 V. The core has a cross-sectional area of 8 mm x 8 mm and a maximum flux density of 1.3 T. Calculate the following:

a. The maximum flux of the transformer. [6 marks]

b. The average output voltage. [4 marks]

c. The required number of turns of the primary and secondary windings. [6 marks]

23. You are given the task of designing an inductor for a Boost converter operating at 20 kHz, with a 42% duty cycle and supply voltage of 230 V (rms). The magnetic material core is a toroid inductor that has permittivity constant of 10^{-4}, a cross-sectional area of 2 cm^2, and average radius of 0.8 cm. Assume a maximum flux density of 0.055 Tesla at the frequency of operation. Calculate:

a. The number of turns of the windings in the inductor. [4 marks]

b. The inductance-of-inductor. [2 marks]

G. Thermal and Noise Analysis

24. Given below is a thermal circuit arrangement setup for heat sink arrangement of a given power transistor in an audio amplifier.

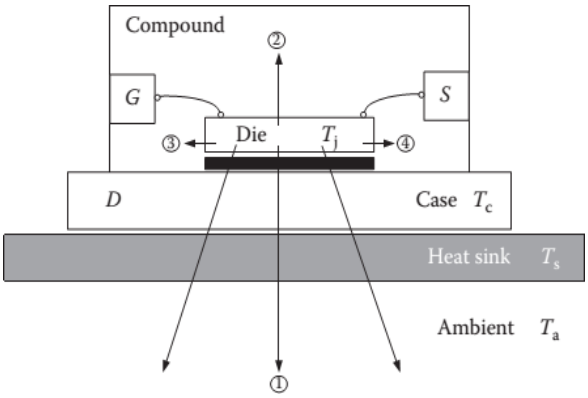

a. Draw the equivalent thermal circuit of the transistor and derive the equation that illustrates the temperature allocations of the thermal circuit given above. [4 marks]

b. Determine what maximum dissipation will be allowed for an 80-W silicon transistor (rated at 25°C) if derating is required above 25°C by a derating factor of 0.5 W/°C at a case temperature of 125°C. [2 marks]

c. A silicon power transistor is operated with a heat sink (θ = 1.5 C/W). The transistor, rated at 150 W (25°C), has θ = 0.5 C/W, and the mounting insulation has θ = 0.6 C/W. What maximum power can be dissipated if the ambient temperature is 40°C and T = 200°C? [2 marks]

25. A microprocessor as shown in the figure below is dissipating 100 W worth of heat. From its datasheet, its junction-to-ambient thermal resistance is 0.5°C/W.

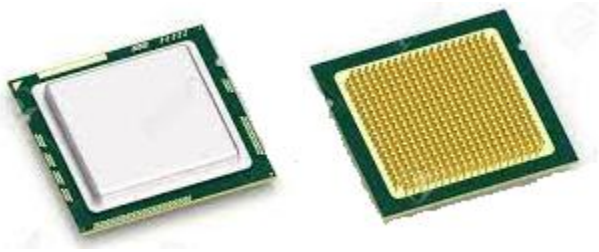

a. What is the junction temperature, T_j? [2 marks]

b. Assume 30°C ambient temperature. If the $T_j(\max)$ is 100°C, what is the thermal design power (TDP) of the microprocessor? [2 marks]

c. Consider the cooling package configuration given below of the microprocessor with a silicon die attached to a thermal plate (heat spreader) with a thermal interface material (TIM).

Sketch an equivalent thermal circuit diagram of the microprocessor's cooling package. [4 marks]

d. The die is dissipating power, and the heat is lost from the thermal plate surface. What is the die temperature (T_j) and the junction-to-case thermal resistance (R_{jc})? Assume 1-D conduction. [24 marks]

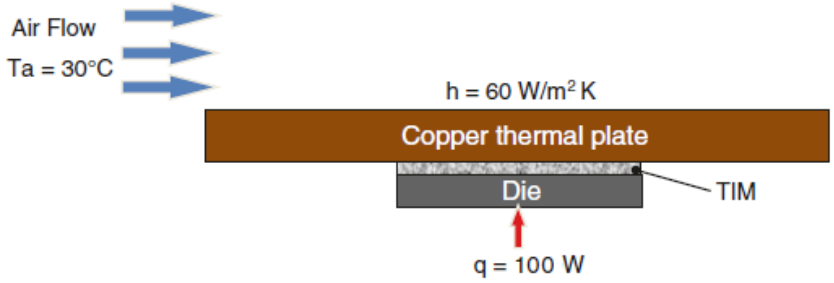

Note:

Copper thermal plate:

- Thermal conductivity, k = 400 W/mK
- Size = 50 mm × 50 mm
- Thickness = 5 mm

Silicon die:

- Thermal conductivity, k = 120 W/mK
- Size = 15 mm × 15 mm
- Thickness = 0.5 mm

TIM:

- Thermal conductivity, k = 1 W/mK
- Bond line thickness (BLT) = 0.05 mm

26. A 741 op amp is configured as an inverting amplifier with resistors R_1 = 100 kΩ, R_2 = 200 kΩ, and R_3 = 68 kΩ.

a. Assuming e_{nw} = 20 nV/√Hz, f_{ce} = 200 Hz, i_{nw} = 0.5 pA/√Hz, and f_{ci} = 2 kHz, find the total output noise above 0.1 Hz, both rms and peak-to-peak. [10 marks]

b. The simulations of the amplifier circuit in the LTspice are given below, describe the performance of the circuit. [4 marks]

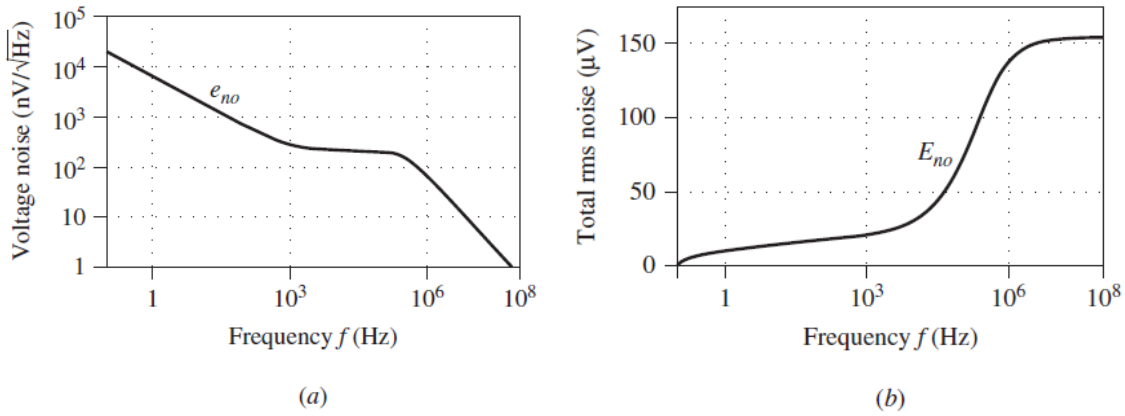

c. Scale the resistances of the circuit so that E_{no} = 50 μV. [12 marks]

d. Find the SNR of the circuit if the input is an ac signal with a peak amplitude of 0.5 V. [6 marks]

27. In the difference amplifier of the figure below, let R_1 = R_3 = 10 kΩ and R_2 = R_4 = 100 kΩ.

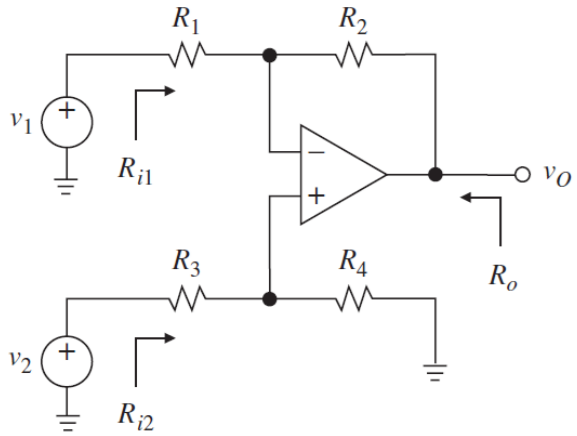

Find the total output noise E_{no} above 0.1 Hz if the op amp is (a) the 741 type [10 marks], (b) the OP27 type [10 marks], (c) compare also the individual components E_{noe}, E_{noi}, and E_{noR} and comment on the result of analysis [4 marks].

Note:

For the 741 assume f_t = 1 MHz, e_{nw} = 20 nV/√Hz, f_{ce} = 200 Hz, i_{nw} = 0.5 pA/√Hz, and f_{ci} = 2 kHz.

For the OP27 assume f_t = 8 MHz, e_{nw} = 3 nV/√Hz, f_{ce} = 2.7 Hz, i_{nw} = 0.4 pA/√Hz, and f_{ci} = 140 Hz.

SELECTIVE FORMULAE IN ANALOGUE ELECTRONICS

Op Amp Circuits

Op Amp

$$A_{DM} = \frac{R_2}{R_1}\left[1 - \frac{\in (R_1+2R_2)}{2(R_1+R_2)}\right] \quad \text{and} \quad A_{CM} = \frac{R_2 \in}{(R_1 + R_2)}$$

$$CMRR = 20\log\left|\frac{A_{DM}}{A_{CM}}\right|$$

Inverting Amplifier

$$V_{out} = -\left(\frac{R_2}{R_1}\right)V_{in}$$

Non-Inverting Amplifier

$$V_{out} = \left(1 + \frac{R_2}{R_1}\right)V_{in}$$

Summing Amplifier

$$V_{out} = \left(\frac{R_f}{R_1}V_1 + \frac{R_f}{R_2}V_2 + \frac{R_f}{R_3}V_3 + \cdots\right)$$

Differential Amplifier

$$v_{out} = \frac{R_2}{R_1}\left[\left(\frac{1 + \frac{R_1}{R_2}}{1 + \frac{R_3}{R_4}}\right)v_2 - v_1\right]$$

Instrumentation Amplifier

$$v_{out} = \left(\frac{R_2}{R_1}\right)\left(1 + \frac{2R_3}{R_G}\right)(v_1 - v_2)$$

Comparator

$$\Delta V_t = V_{TH} - V_{TL}$$

$$\Delta V_T = \left(\frac{R_1}{R_1 + R_2}\right) \times (V_{OH} - V_{OL})$$

Oscillator (Wien-Bridge)

$$\frac{V_o}{V_i} = \frac{j\omega C_1 R_2}{1 + j\omega(C_1R_2 + C_2R_2 + C_1R_1) - \omega^2(C_1C_2R_1R_2)}$$

$$\omega^2 = \frac{1}{C_1C_2R_1R_2}$$

Low/High Pass Filter

$$F_c = \frac{1}{\omega RC}$$

Sallen-Key Filter

$$\omega_0 = \frac{1}{\sqrt{R_1 R_2 C_1 C_2}} \quad \text{and} \quad Q = \frac{1}{R_1 + R_2}\sqrt{R_1 R_2 \frac{C_1}{C_2}}$$

Power Amplifiers

$v_{ce(p-p)} = 2V_{CC}$

$P_{dc} = V_{CC} I_C = I_C^2 R_L'$

$R_L' = n^2 R_L$

$$P_{o(\max)} = \frac{v_{ce(p-p)} \times i_{c(p-p)}}{8}$$

$$V_{out} = V_{REF}\left(1 + \frac{R_2}{R_1}\right) + I_{ADJ} R_2$$

$$f_s = \frac{1}{2\pi\sqrt{LC}}$$

$$f_p = \frac{1}{2\pi\sqrt{LC_T}}$$

$I_{R_s} = I_{Z(min)} + I_{B(max)}$

$$R_s = \frac{V_{in(min)} - V_Z}{I_{R_s}}$$

$$I_{C(sat)} = \frac{V_{CC}}{R_C + R_E} \quad or \quad I_{C(sat)} = \frac{V_{CEQ}}{R_L}$$

$V_{CE(off)} = V_{CC}$

$$V_B = \left(\frac{R_2}{R_1 + R_2}\right) V_{CC}$$

$V_E = V_B - 0.7\ \text{V}$

$$I_E = \frac{V_E}{R_E}$$

$V_{CEQ} = V_{CC} - I_C(R_C + R_E)$

$$I_{C(sat)} = I_{CQ} + \frac{v_{CEQ}}{r_C}$$

$V_{CE(off)} = V_{CEQ} + I_{CQ} r_C$

$$V_{PP} = 2I_{CQ}r_C$$

$$I_{bias} = \frac{V_{CC} - 2V_{BE}}{2R}$$

$$I_{ave} = \frac{I_{C(sat)}}{\pi}$$

$$P_{out(\max)} = \frac{MPP^2}{8R_L}$$

$$V_Z = V_{Z0} + r_Z I_Z$$

$$\Delta V_O = r_Z \Delta I_Z$$

Power Supplies

$$\text{Line Regulation} = \frac{\Delta V_o}{\Delta V_i}$$

$$\text{Load Regulation} = \frac{\Delta V_o}{\Delta I_L}$$

Thermal Analysis

$$R_{\theta ja} = R_{\theta jc} + R_{\theta cs} + R_{\theta sa}$$

$$T_j = P_d * \theta_{ja} + T_a$$

$$\theta_{cs} = \frac{\rho \times t}{A}$$

Noise Analysis

Electron charge, $q = 1.6 \times 10^{-19}$ Coulomb

Boltzman's constant, $k = 1.38 \times 10^{-23}$ Joule/Kelvin

Johnson noise spectral density, $e_n = \sqrt{4ktR}$ V/$\sqrt{\text{Hz}}$

Johnson noise voltage, $E_n = e_n\sqrt{f_H - f_L}$ V

Shot noise spectral density, $i_n = \sqrt{2qI}$ A/$\sqrt{\text{Hz}}$

Thermal voltage, $V_T \approx 25$ mV for $T = 20°C$

E24 Resistor Value Standards

10, 11, 12, 13, 15, 16, 18, 20, 22, 24, 27, 30, 33, 36, 39, 43, 47, 51, 56, 62, 68, 75, 82, 91.