VICTORIA UNIVERSITY OF WELLINGTON
TE HERENGA WAKA

Mid-Term Test Review

XMUT303 Analogue Electronics

Mid-Term Test

- 4 questions, 25 marks each.
- 2 hours.
- Bring non-programmable calculator and Chinese-English dictionary.
- Time and place: T. B. A.

Question Types

Expect 4 types of question in the test:

- Explain…

  (a) Two common classes of operational amplifiers use BJTs and JFETs as their input devices. Explain why you would choose one or the other. [5 marks]

- Describe…

  (b) Describe the operation of an op amp based inverting amplifier. [5 marks]

Question Types

- Calculate…

  (c) Show that the output voltage, v_O, can be expressed in terms of the input voltages, v_1 and v_2. [5 marks]

- Design/sketch…

  (d) Design and sketch an external nulling circuit to remove the expected offset error. [5 marks]

Topics

1. Operational amplifiers.
2. Op amp characteristics and analysis.
3. Op amp circuits I .
4. Op amp circuits II.

I. Operational Amplifier (Lab)

- Amplifiers, integrator, differentiator, summer, etc.
- Measuring Z_{in}, Z_{out}, and frequency response.
- Colour & numerical codes for passive components.
- PSU, function generator, oscilloscope, multimeter, and breadboard.

I. Operational Amplifier (Theory)

- Nodal analysis: A_v, Z_{in}, and Z_{out}.
- Differential vs. common mode.
- Circuit topologies.

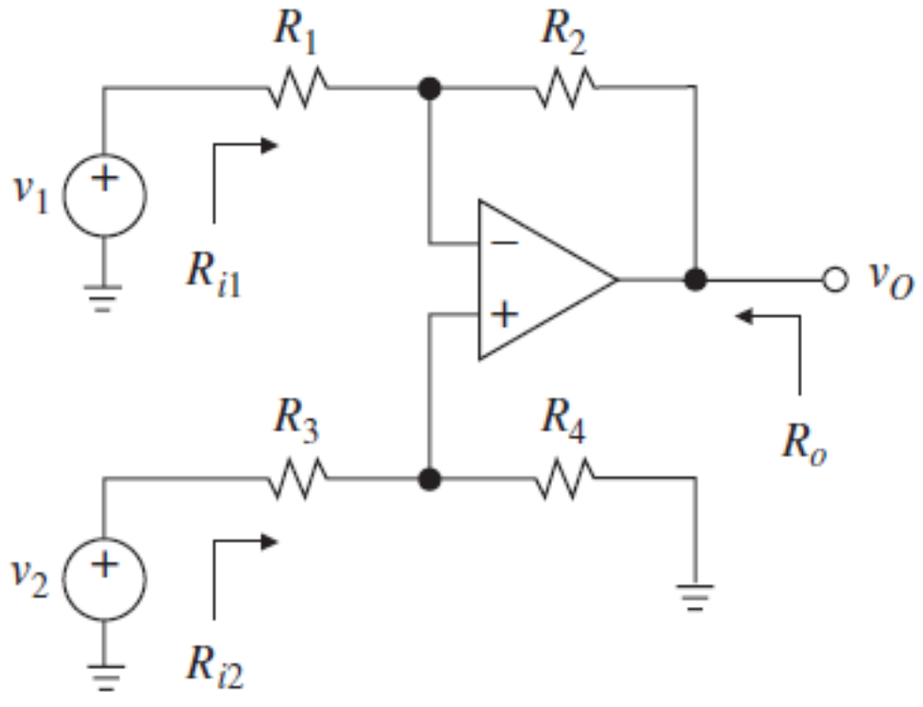

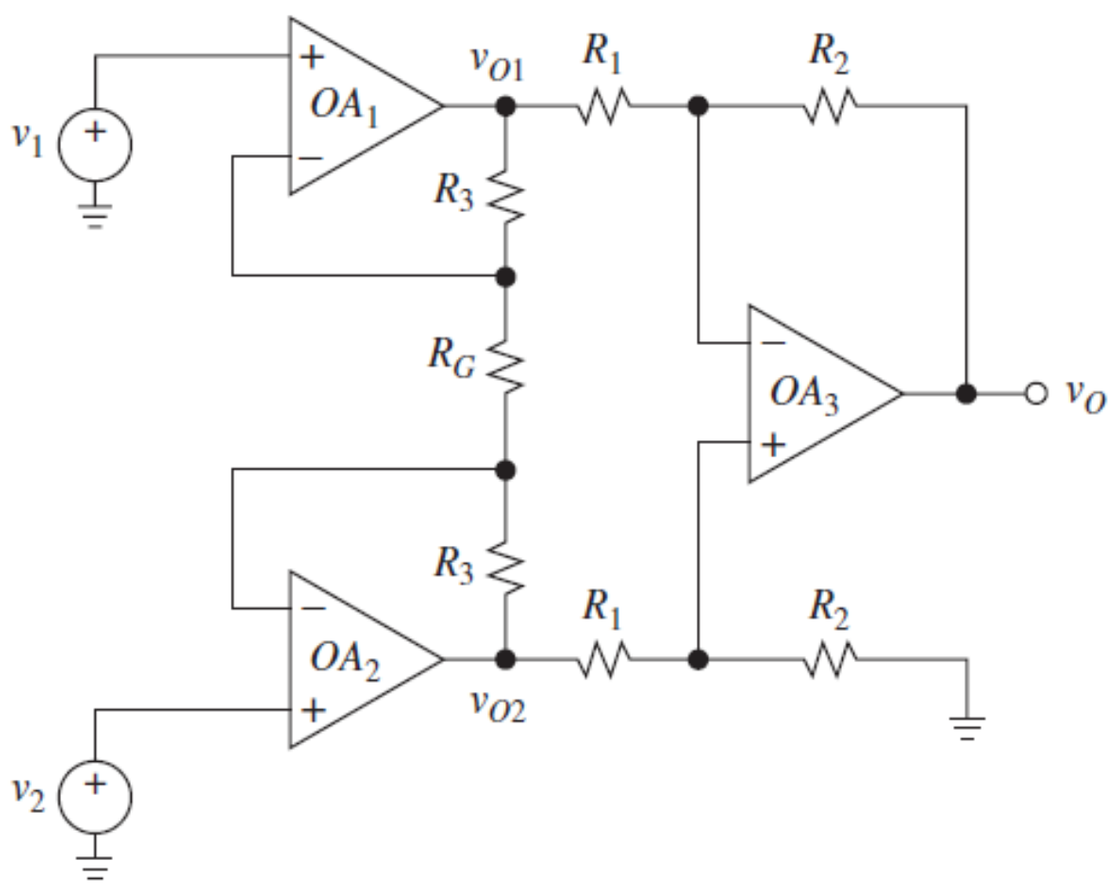

2. Op Amp Analysis

- Op amp internals.
- Dynamic imperfections.
- Static imperfections.
- Nulling circuits.

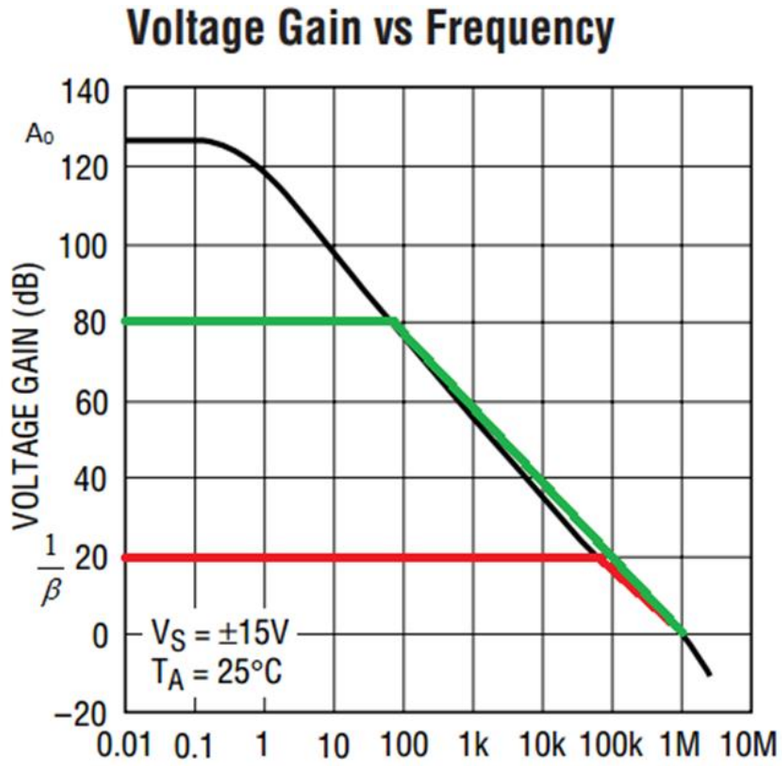

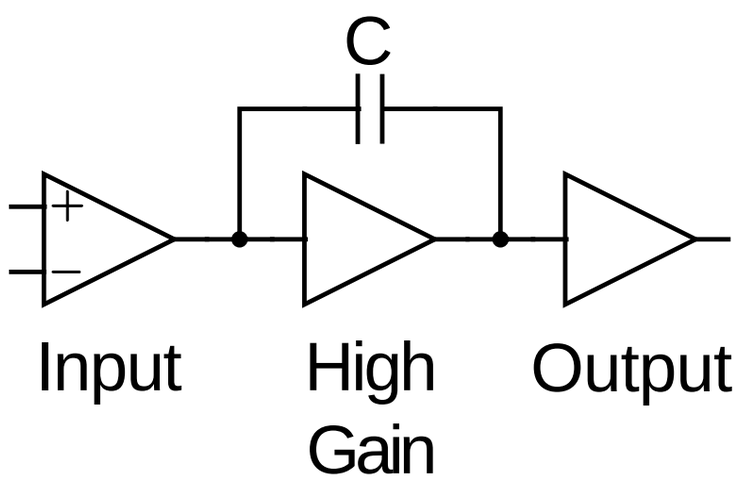

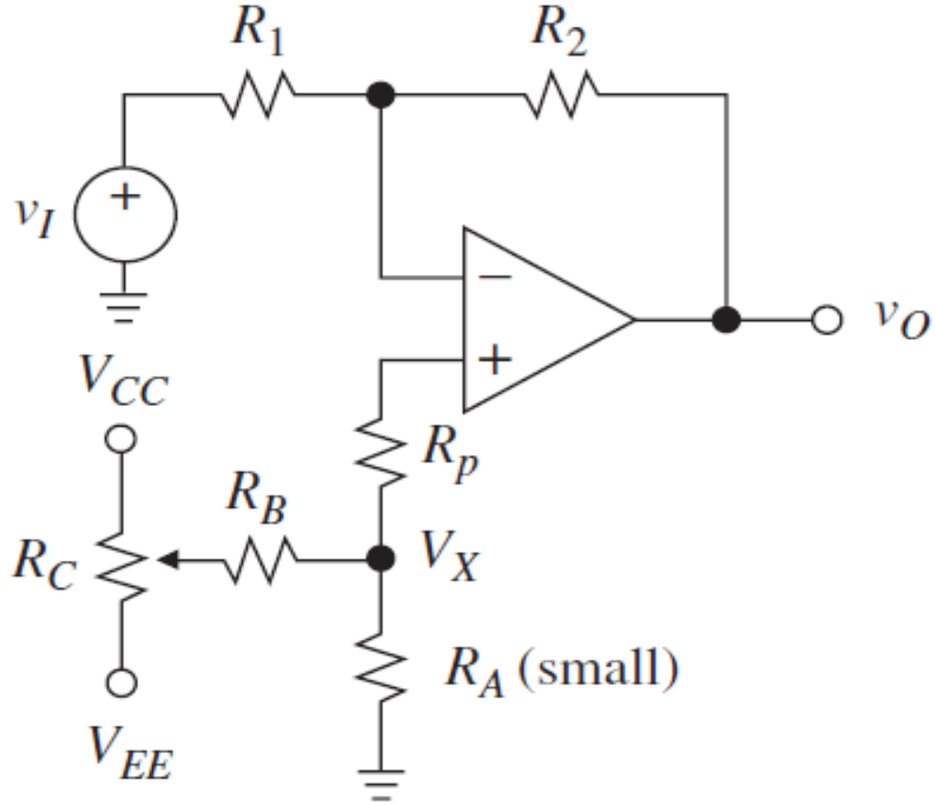

2. Op Amp Analysis

- Feedback.
- ROC, peaking, and ringing.
- Compensation.
- Loading.

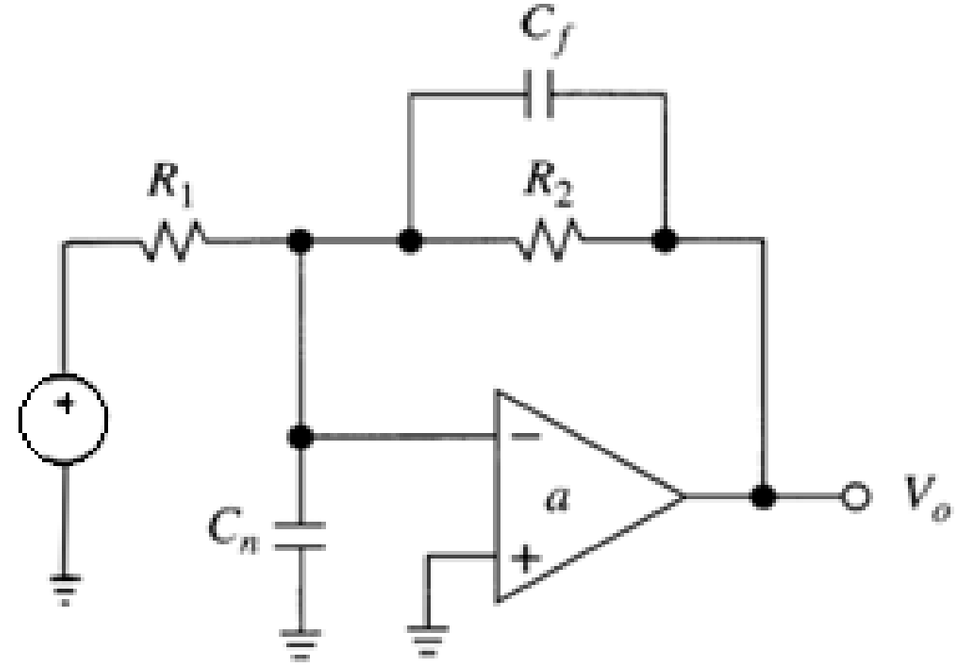

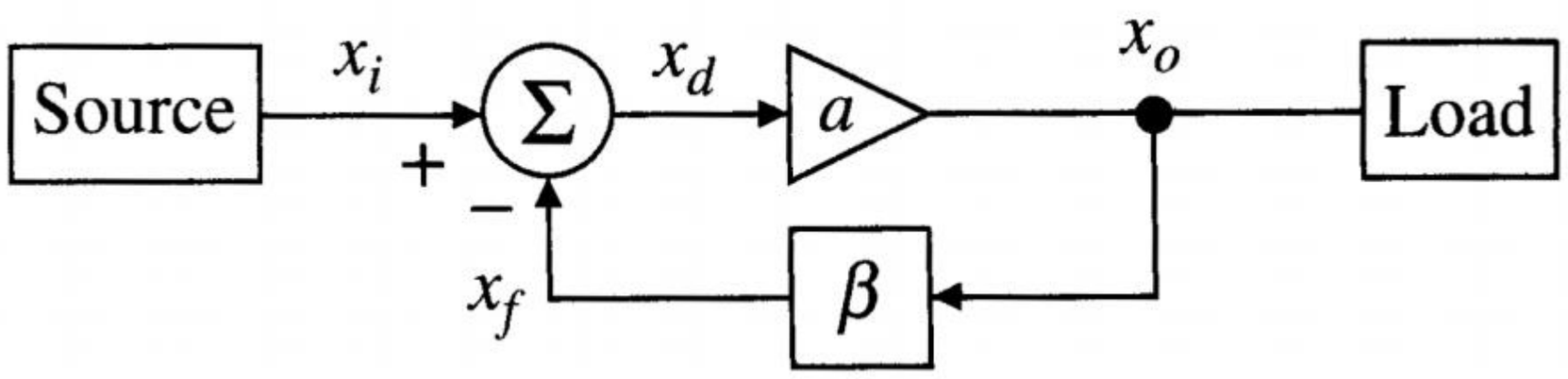

3. Op Amp Circuits I

Basic op-amp circuits:

- Inverting amplifier.
- Non-inverting amplifier.
- Voltage follower.
- Summing amplifier.
- Integrator/differentiator.

3. Op Amp Circuits I

- Difference amplifier.

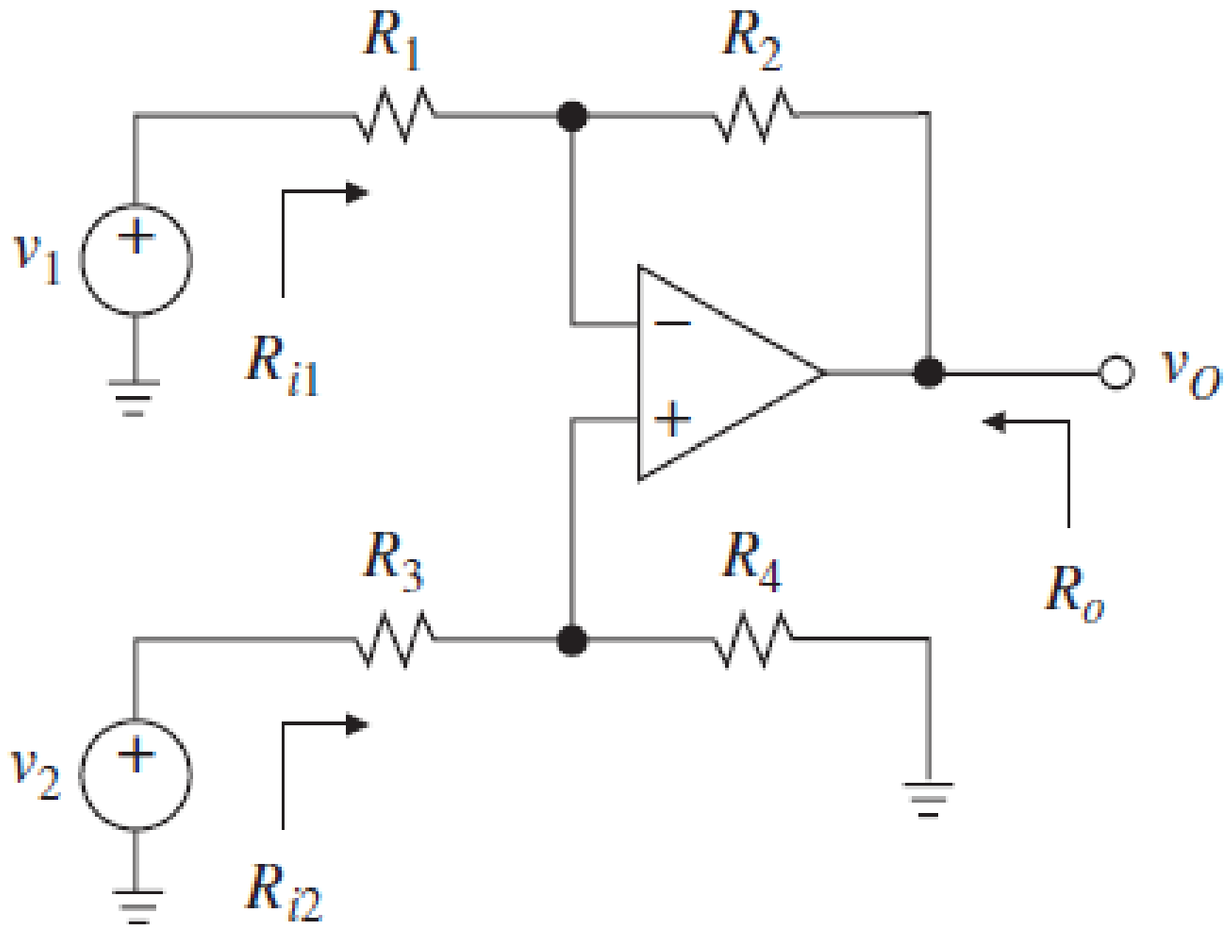

3. Op Amp Circuits I

- Instrumentation amplifier.

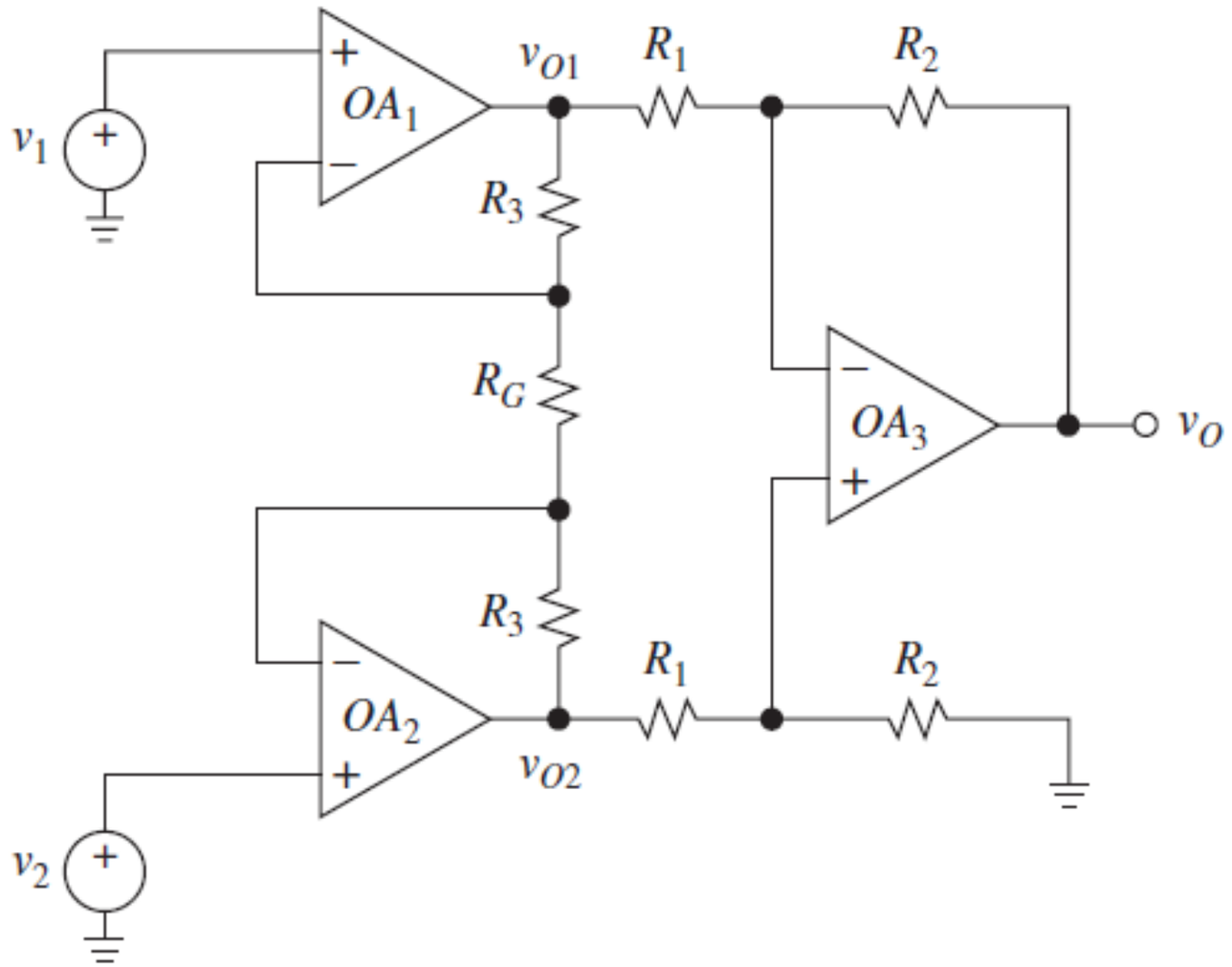

4. Op Amp Circuits II

- Amplifiers (current-to-voltage amplifier).

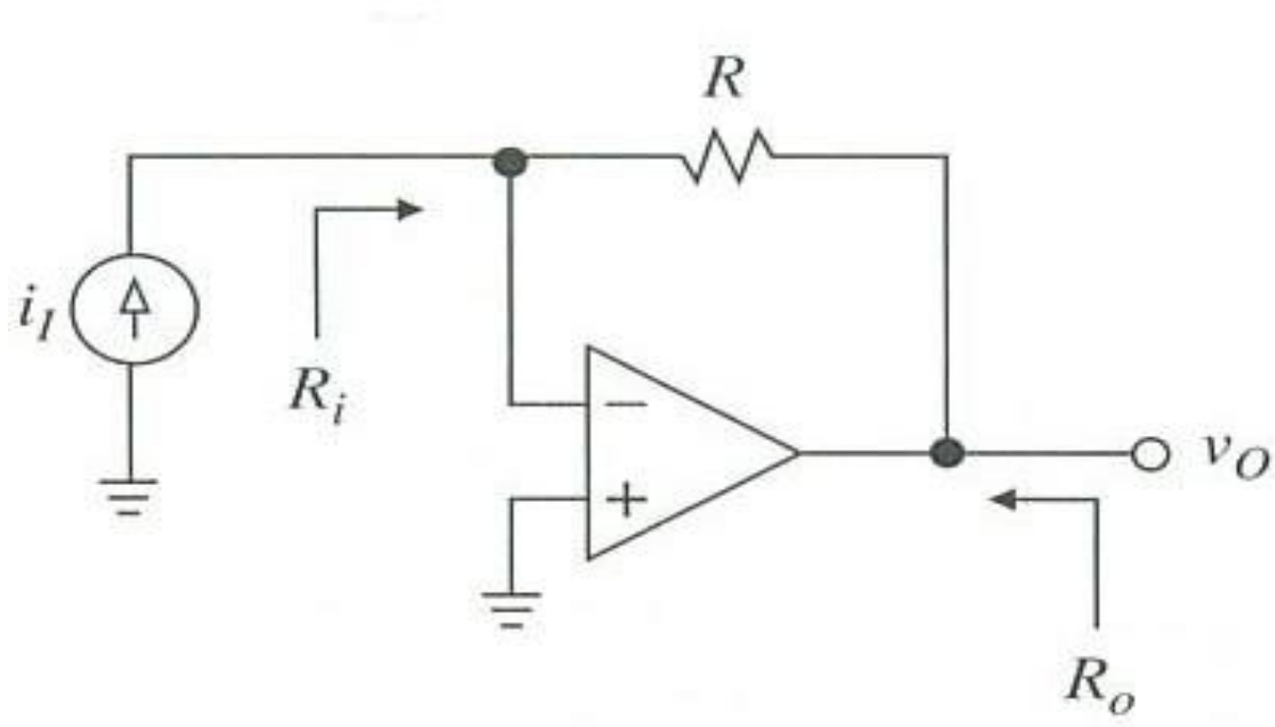

4. Op Amp Circuits II

- Comparator (characteristics, hysteresis, and thresholds).

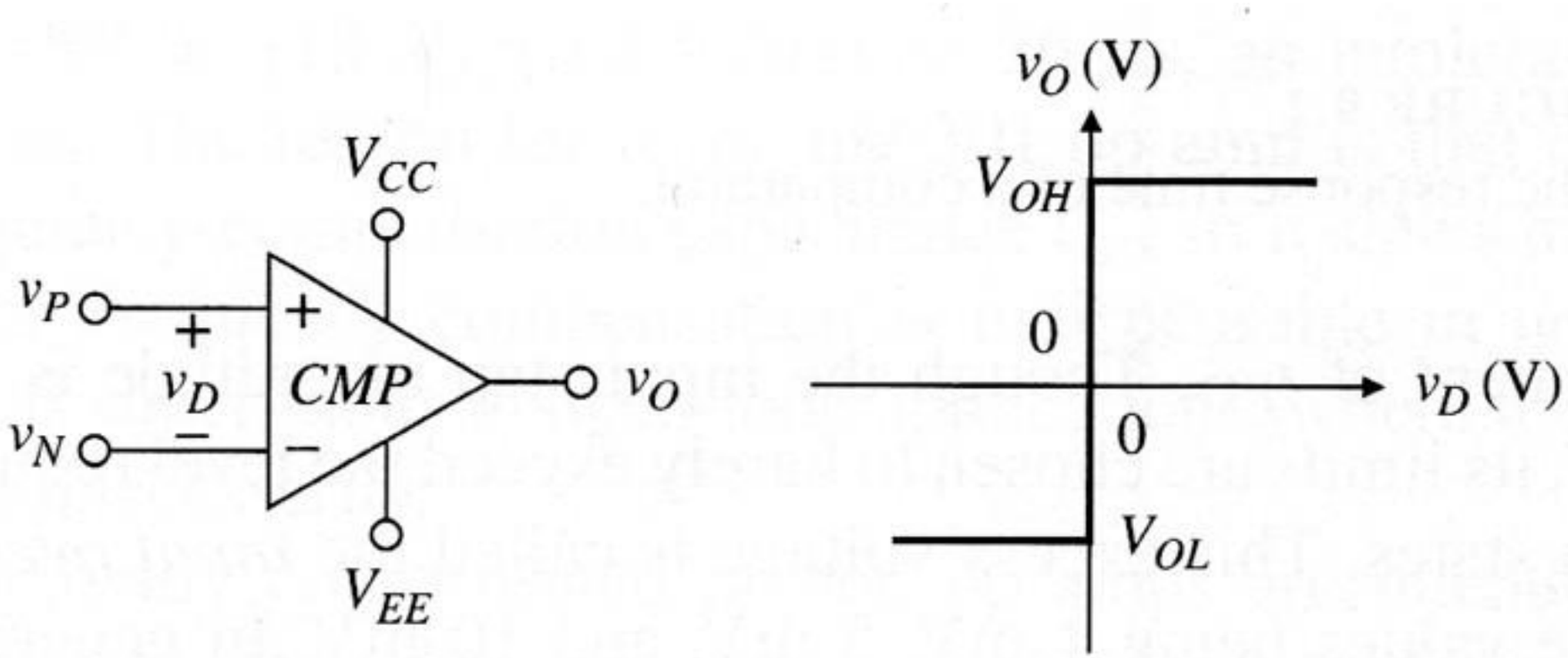

4. Op Amp Circuits II

- Rectifiers (half-wave rectifier).

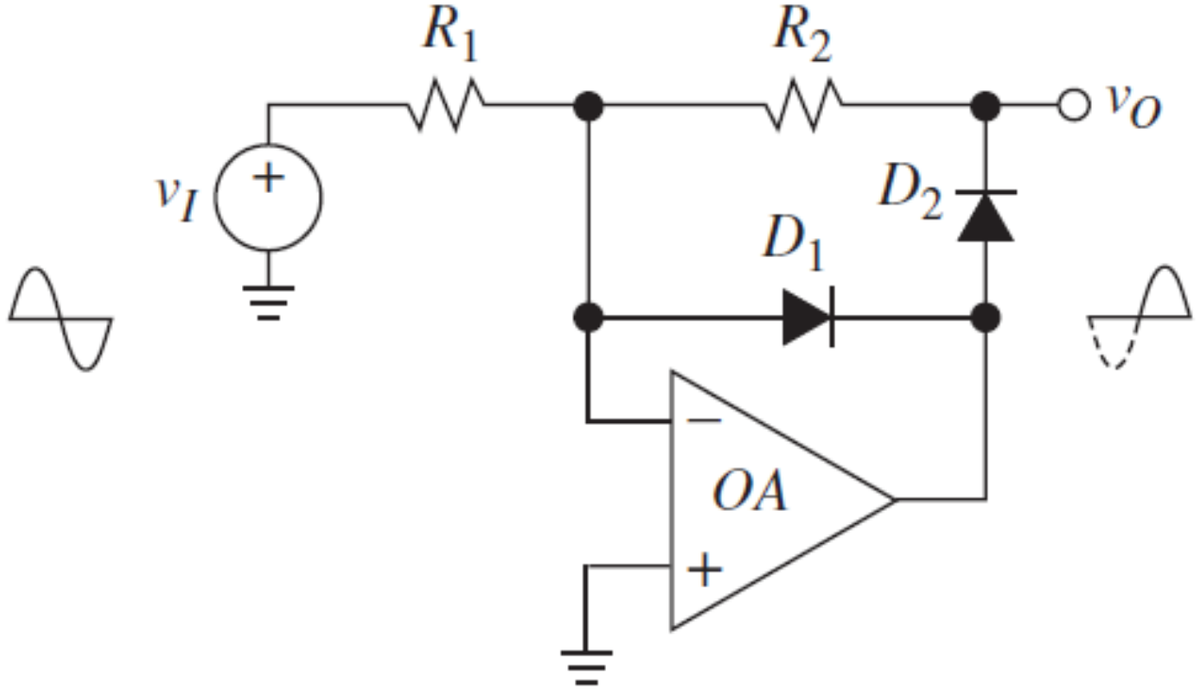

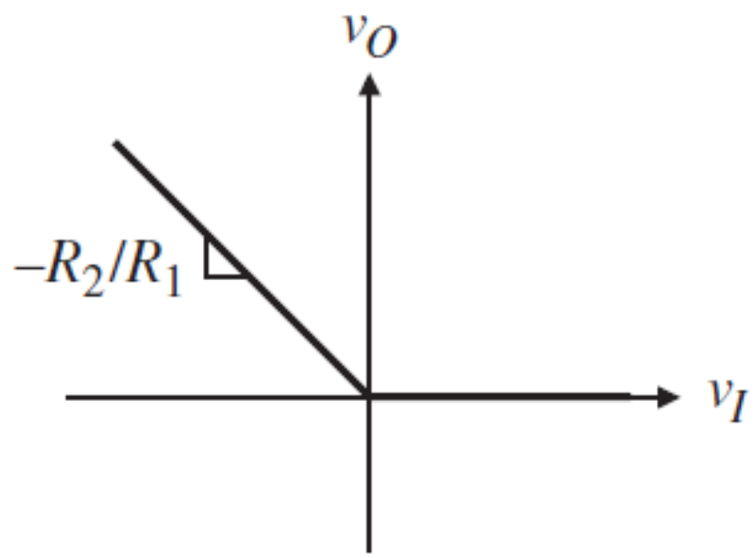

4. Op Amp Circuits II

- Rectifiers (full-wave rectifier).

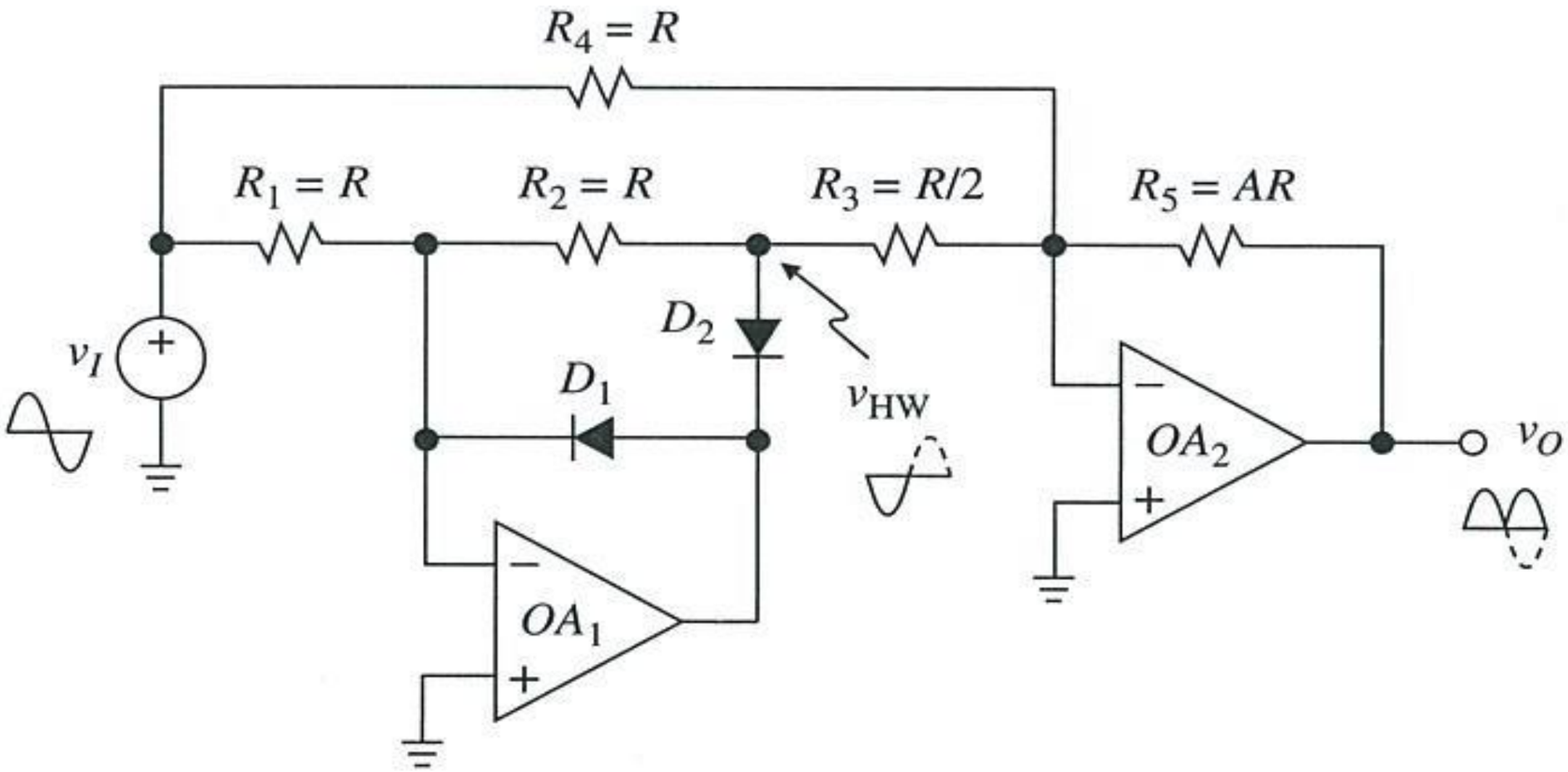

4. Op Amp Circuits II

- Oscillators (Wien-Bridge oscillator).

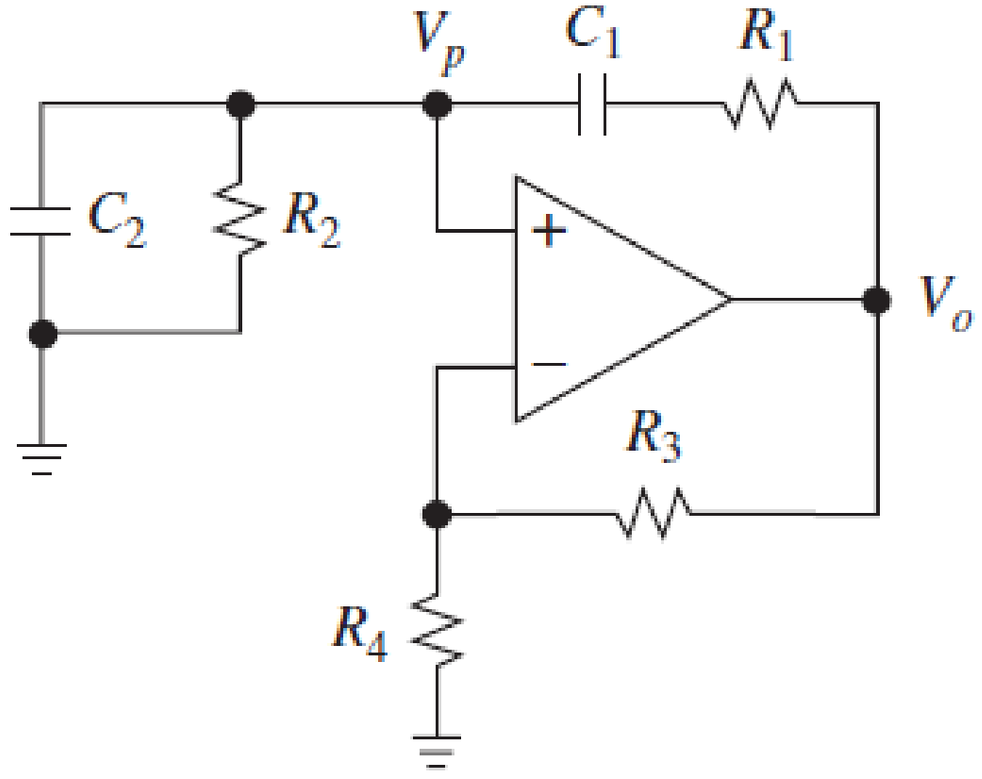

4. Op Amp Circuits II

- Oscillators (phase-shift oscillator).

