XMUT303 Analogue Electronics

Mid-Term Test Revision Questions (Solution)

A. Operational Amplifier

1. An engineer in an electronic manufacturing company implements an inverting amplifier using an op amp, as shown in the figure below, but finds that the circuit picks up interference, presumably due to a ground loop.

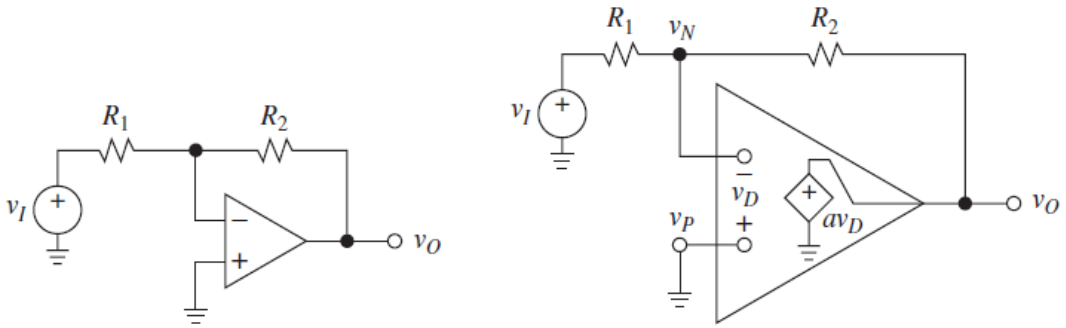

(a) (b)

a. Providing an expression for the transfer function equation of the ideal inverting amplifier circuit given above, proof that the transfer function equation of practical inverting amplifier with a finite open-loop gain (a) is as given below. [4 marks]

$$\frac{V_O}{V_I} = -\left(\frac{R_2}{R_1}\right)\left(\frac{1}{1+(1+R_2/R_1)/a}\right)$$

Solution

The transfer function of the ideal inverting amplifier is:

$$v_o = -\left(\frac{R_2}{R_1}\right)v_i$$

The transfer function of the practical inverting amplifier with a finite open-loop gain is determined as follows.

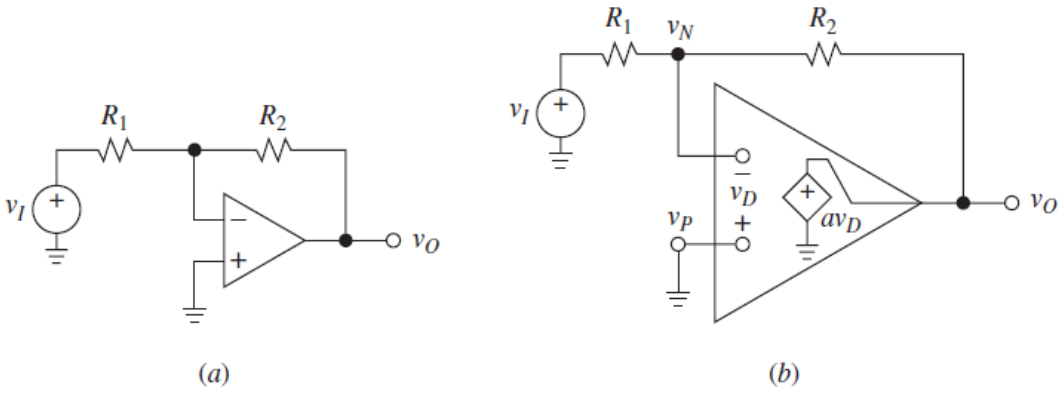

The voltage at the inverting pin of inverting amplifier is:

$$v_N = \left(\frac{R_2}{R_1 + R_2}\right) v_I + \left(\frac{R_1}{R_1 + R_2}\right) v_O$$

Or

$$v_N = \left(\frac{1}{1 + \frac{R_1}{R_2}}\right) v_I + \left(\frac{1}{1 + \frac{R_2}{R_1}}\right) v_O \qquad (1)$$

The voltage at the non-inverting pin of inverting amplifier is:

$$v_P = 0$$

The output voltage of the inverting amplifier is determined from:

$$v_O = a(v_P - v_N) \qquad (2)$$

Combining equations (1) and (2) will give:

$$v_O = a\left[-\left(\frac{1}{1 + \frac{R_1}{R_2}}\right) v_I - \left(\frac{1}{1 + \frac{R_2}{R_1}}\right) v_O\right]$$

Rearrange the equation given above

$$\left[1 + \left(\frac{a}{1 + \frac{R_2}{R_1}}\right)\right] v_O = -\left(\frac{a}{1 + \frac{R_1}{R_2}}\right) v_I$$

The transfer function of the practical inverting amplifier is:

$$\frac{v_O}{v_I} = \frac{\left(\frac{a}{1 + \frac{R_1}{R_2}}\right)}{1 + \left(\frac{a}{1 + \frac{R_2}{R_1}}\right)}$$

Simplify the equation above becomes:

$$\frac{v_O}{v_I} = -\left(\frac{R_2}{R_1}\right)\left[\frac{1}{1+\left(\frac{1}{a}\right)\left(\frac{R_1+R_2}{R_1}\right)}\right]$$

b. Calculate the output voltage of the circuit of ideal inverting amplifier and practical inverting amplifier circuit with a finite open-loop gain, given signal at the input of the amplifier is 2 Volts and the values of the resistors are R_1 = 2 kΩ, R_2 = 12 kΩ, and a = 10^6 V/V. [4 marks]

Solution

For given values of the components in the circuit, the output voltage of ideal inverting amplifier is:

$$v_o = -\left(\frac{R_2}{R_1}\right)v_i = -\left(\frac{12\times10^3}{2\times10^3}\right)\times 2 = -12\text{ V}$$

The output voltage of practical inverting amplifier with a finite open-loop gain is:

$$v_O = -\left(\frac{R_2}{R_1}\right)\left[\frac{1}{1+\left(\frac{1}{a}\right)\left(\frac{R_1+R_2}{R_1}\right)}\right]v_I$$

$$= -\left(\frac{12\times10^3}{2\times10^3}\right)\left[\frac{1}{1+\left(\frac{1}{10^6}\right)\left(\frac{2\times10^3+12\times10^3}{2\times10^3}\right)}\right]\times 2 = -11.99\text{ V}$$

c. Compare the performance of the ideal and practical inverting amplifier circuit with a finite open-loop gain as in part (b). With the aid of diagrams, suggest two ways that the engineer could do to reduce the noise level on the output. [2 marks]

Solution

Comparing the ideal inverting amplifier with the practical inverting amplifier with a finite open loop gain. The output voltage of ideal inverting amplifier is -12 V whereas the output voltage of practical inverting amplifier with a finite open loop gain is -11.99 V. The output voltage is slightly less in the practical inverting amplifier with a finite open-loop gain compared with ideal inverting amplifier.

The solution to reduce the noise level at the output of the amplifier could be by e.g. using differential input amplifier, using twisted pair cable, or adding ferrite-bead choke.

2. Consider the difference amplifier shown in the figure below.

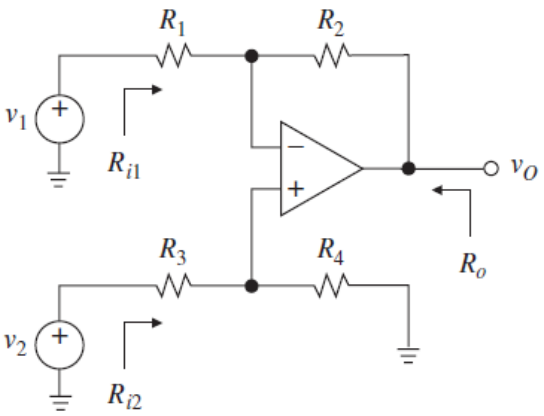

a. State an equation that best explains the output voltage, v_o, expressed in terms of the input voltages, v_1 and v_2 of the circuit given above. [2 marks]

Solution

The output voltage of the given difference amplifier circuit is:

$$v_o = -\left(\frac{R_2}{R_1}\right)v_1 + \left[\frac{(R_1 + R_2)}{(R_3 + R_4)}\left(\frac{R_4}{R_1}\right)\right]v_2$$

b. What is the common-mode gain (A_{CM}), differential-mode gain (A_{DM}) and common-mode rejection ratio (CMRR). [3 marks]

Solution

A_{CM} is gain of the difference amplifier as the average of its two input signals.

A_{DM} is gain of the difference amplifier as the difference of its two input signals.

CMRR is the ability of the differential amplifier to reject a common mode signal.

c. Calculate the common-mode gain, A_{CM} (dB), the differential-mode gain, A_{DM} (dB), and the common-mode rejection ratio, $CMRR$ (dB) for the given circuit. Knowing that $R_1 = 1\ \text{k}\Omega$, $R_2 = 10\ \text{k}\Omega$ and component mismatch, ε = 0.01 [10 marks]

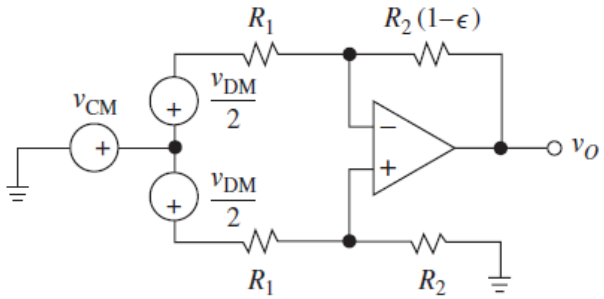

Solution

Common mode gain (A_{CM}):

$$A_{CM} = \left(\frac{R_2}{R_1 + R_2}\right)\epsilon = \left(\frac{10\text{k}\Omega}{1\text{k}\Omega + 10\text{k}\Omega}\right)0.01 = 0.00909$$

Differential mode gain (A_{DM}):

$$A_{DM} = \frac{R_2}{R_1}\left[1 - \frac{(R_1 + 2R_2)}{(R_1 + R_2)}\left(\frac{\epsilon}{2}\right)\right] = \frac{10\text{k}\Omega}{1\text{k}\Omega}\left[1 - \frac{1\text{k}\Omega + 2(10\text{k}\Omega)}{(1\text{k}\Omega + 10\text{k}\Omega)}\left(\frac{0.01}{2}\right)\right] = 9.9$$

Common Mode Rejection Ratio ($CMRR$):

$$CMRR = 20\log\left|\frac{A_{DM}}{A_{CM}}\right| = 20\log\left|\frac{1 + \left(\frac{R_2}{R_1}\right)}{\epsilon}\right| = 20\log\left|\frac{1 + \left(\frac{10\text{k}\Omega}{1\text{k}\Omega}\right)}{0.01}\right| = 60.8\text{ dB}$$

3. Considering the nulling circuit for an inverting amplifier shown in the figure as given below, the resistors R_1 = 1kΩ and R_2 = 22kΩ and supply voltages of V_{CC} = +15 V and V_{EE} = -15 V.

   The op amp used is an LM324 with its parasitic parameters from the datasheet are as follows:

   - Nominal input offset voltage, V_{OS} ≤ 3 mV.
   - Input bias current, I_B ≤ 100 nA.
   - Input offset current, I_{OS} ≤ 30 nA.

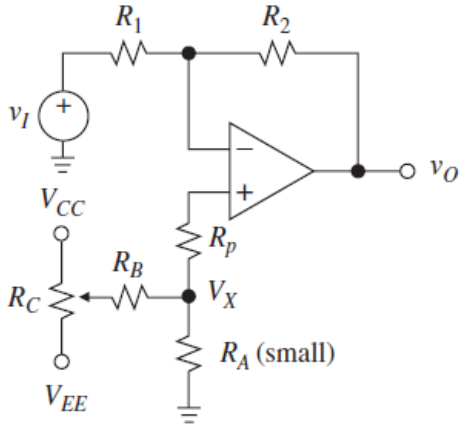

   a. Describe nulling circuit. [2 marks]

   Solution

   Nulling is a circuit arrangement for eliminating imperfections that existed in the circuit such as biasing and offsetting requirements of the components and/or the circuits.

   b. Describe three types of nulling circuit in practice. [3 marks]

   Solution

   Using external components and circuit, through built-in feature of the electronic devices (e.g. adjusting the nulling pin of the op amp), or designing at circuit level that already taking into account biasing and offsetting requirements.

c. The resistors R_A, R_B, R_C, and R_P are included in the circuit to reduce the effects of these parasitic parameters. Give appropriate values for these resistors. Show your working and explain your reasoning. [15 marks]

Solution

The value of resistor R_P is found from:

$$R_P = R_1 \parallel R_2 = \frac{(22\text{k}\Omega)(1\text{k}\Omega)}{22\text{k}\Omega + 1\text{k}\Omega} = 956.5\ \Omega \approx 820\ \Omega \qquad (\text{using E12 standard})$$

Since $R_P + R_A = 956.5\ \Omega$, the value of resistor R_A is found from:

$$R_A = 956.5 - R_P \approx 120\ \Omega$$

Note that:

$$R_P + R_A > R_1 \parallel R_2$$

But, the value of V_{null} is found from:

$$V_{null} = V_{OS} + I_{OS} \times (R_P + R_A)$$
$$= 3\ \text{mV} + 30\ \text{nA} \times (820\ \Omega + 120\ \Omega) = 3.03\ \text{mV}$$

Say that we use 5 mV to be safe.

$$\frac{\pm V_{null}}{\pm V_{CC}} = \frac{R_A}{R_A + R_B} \approx \frac{R_A}{R_B}$$

Rearranging and entering values into the equation, the value of resistor R_B is:

$$R_B = \left(\frac{\pm V_{CC}}{\pm V_{null}}\right) R_A$$
$$= \left(\frac{\pm 15\ \text{V}}{\pm 5\ \text{mV}}\right) \times 120\ \Omega = 360\ \text{k}\Omega$$

Then, the value of resistor R_C is found from (note that R_C is a variable resistor):

$$R_C = \frac{R_B}{10} \approx 10 - 50\ \text{k}\Omega$$

4. You are given the following two-op amp instrumentation circuit in the figure below.

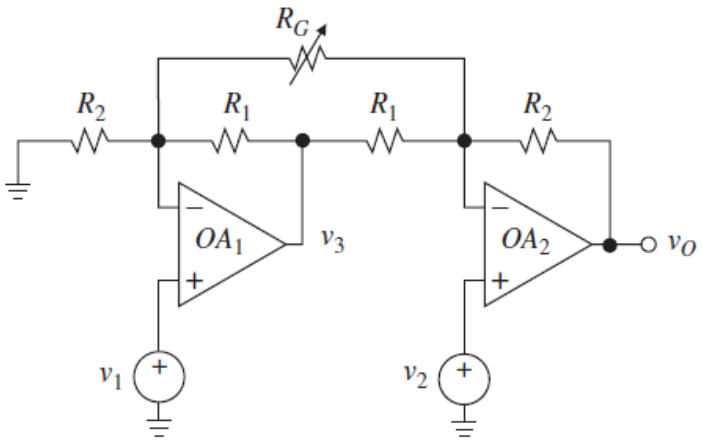

a. Why are instrumentation amplifiers commonly manufactured as monolithic integrated circuits? [2 marks]

Solution

Instrumentation amplifiers are typically packaged as monolithic integrated circuits, to ensure that they have high common mode rejection ratio.

b. If you must design an op-amp based amplifier in cascading arrangement, what circuit feature usually you have at the output stage? Give two reasons for your answer.

[2 marks]

Solution

The output stage of a multistage amplifier usually employs a push-pull amplifier. It is to ensure sufficient coverage of the signal bandwidth and adequate driving of the load.

c. State an expression for the gain, $v_o/(v_2-v_1)$, for the circuit shown in the circuit above.

[3 marks]

Solution

The expression for the gain of the given instrumentation amplifier circuit is:

$$\frac{v_o}{v_2 - v_1} = 1 + \frac{R_2}{R_1} + 2\left(\frac{R_2}{R_G}\right)$$

d. Calculate the minimum gain of the circuit shown above if R_1= 1 kΩ and R_2 = 10 kΩ.

[4 marks]

Solution

Providing R_g is typically considerably bigger than R_2, the minimum gain of the instrumentation amplifier circuit is 11 times.

$$\text{Gain(min)} \approx 1 + \left(\frac{R_2}{R_1}\right) = 1 + \left(\frac{10\ \text{k}\Omega}{1\ \text{k}\Omega}\right) = 11$$

B. Op Amp Analysis

5. Given in the figure below a circuit diagram of op amp loaded with a resistive load and an imperfect voltage source.

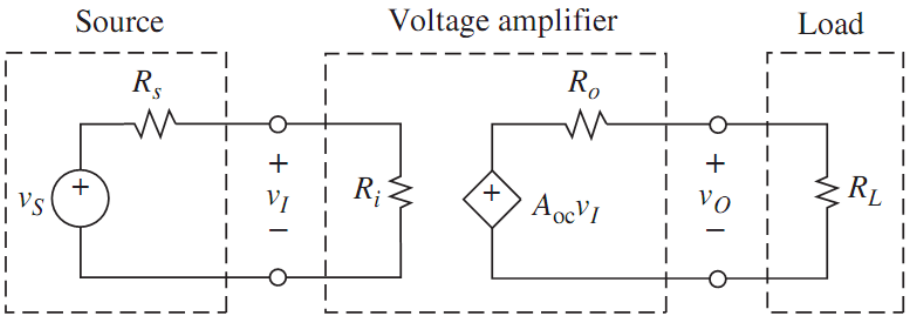

a. Describe the difference between op amp with FET input stages with those with BJT transistors. [2 marks]

Solution

Compared to op amps with FET input stages, op amps with BJT input stages have higher bias current but lower offset voltage.

b. The amplifier above has R_i = 100 kΩ, A_{oc} = 100 V/V, and R_o = 1 Ω and is driven by a source with R_s = 25 kΩ and drives a load R_l = 3 Ω. Calculate the attenuation at the input, the attenuation at the output, the overall gain, and comment on the result. [10 marks]

Solution

The attenuation at the input is:

$$A_{input} = \frac{R_i}{R_s + R_i} = \frac{100\ \text{k}\Omega}{25\ \text{k}\Omega + 100\ \text{k}\Omega} = 0.8$$

The attenuation at the output is:

$$A_{output} = \frac{R_l}{R_o + R_l} = \frac{3\ \Omega}{1\ \Omega + 3\ \Omega} = 0.75$$

By using the equation given in (a), we obtain the overall gain of the amplifier:

$$\frac{V_o}{V_s} = \left(\frac{R_i}{R_s + R_i}\right) A_{oc} \left(\frac{R_l}{R_o + R_l}\right)$$

As a result, the overall gain for the first case is

$$\frac{V_o}{V_s} = \left(\frac{100\ \text{k}\Omega}{25\ \text{k}\Omega + 100\ \text{k}\Omega}\right)(100)\left(\frac{3\ \Omega}{1\ \Omega + 3\ \Omega}\right)$$

$$= (0.8)(100)(0.75) = 60$$

This is less than 100 V/V because of loading e.g. attenuations at the input and at the output.

6. Given in the figure below is a frequency response of an open loop voltage amplifier.

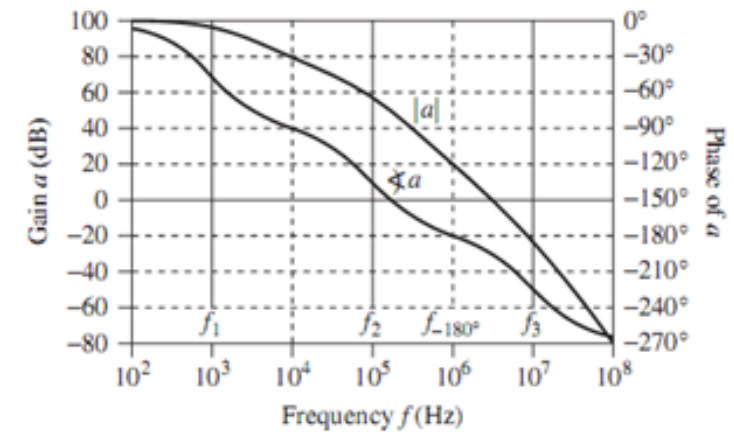

a. Estimate the phase margin and gain margin of the amplifier above. [10 marks]

Solution

The phase margin in the frequency response of an op amp is given as:

$$\phi_m = 180° + \sphericalangle T(jf_x)$$

We have the phase margin of the op amp circuit above (at f = 2 x 10^6 Hz) as:

$$\phi_m = 180° - 205° = -25°$$

The gain margin in the frequency response of an op amp (at f = 10^7 Hz) is given as:

$$A_m = A_{-180} = -20$$

We have the gain margin of the op amp circuit above as -20 dB

b. With your estimation on the phase and gain margin, is the amplifier stable or not stable? [2 marks]

Solution

Based on the estimation of the phase margin and gain margin the amplifier is not stable, as at 180° its gain and phase are already in the negative zone.

c. If you must redesign the above amplifier, what do you do to make the amplifier to be stable? [2 marks]

Solution

You could consider e.g. form a closed loop or feedback circuit with a considerable gain or add a controller to compensate for introducing extra gain or phase margins to the amplifier.

7. For a given op amp circuit diagram shown in the figure below.

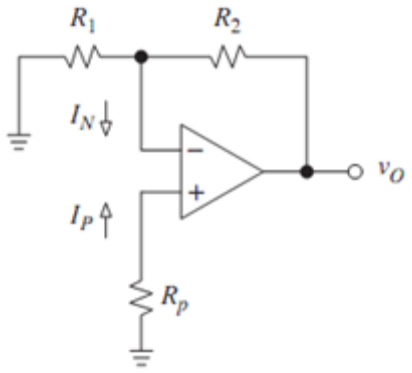

a. What are bias current and offset current in an op amp? [2 marks]

Solution

Bias current is the average of the currents in the input pins of the op amp and offset current is the difference between the currents at the input pins of the op amp.

b. Let R_1 = 22 kΩ and R_2 = 2.2 MΩ, and let the op amp ratings be I_B = 80 nA and I_{OS} = 20 nA. Calculate the output error of the amplifier given above due to input bias current. [10 marks]

Solution

The DC noise gain of the op amp is 1 + R_2/R_1 = 101 V/V

Moreover, $(R_2 \parallel R_1) \approx 22$ kΩ, with R_p = 0, we have:

$$E_o = 101 \times (R_2 \parallel R_1) I_N$$
$$\approx 101 \times (R_2 \parallel R_1) I_B$$
$$\approx 101 \times 22 \times 10^3 \times 80 \times 10^{-9} \approx 175 \text{ mV}$$

As a result, the output error is calculated to be 175 mV.

C. Op Amp based Circuits I

8. Given in the figure below is a summing amplifier.

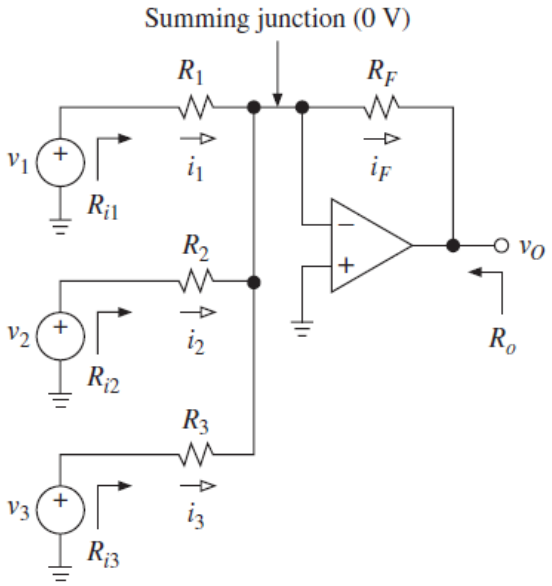

a. Describe the summing amplifier. [2 marks]

Solution

Summing amplifier is a type of operational amplifier circuit which can be used to sum signals. The sum of the input signal is amplified by a certain factor and made available at the output. Any number of input signals can be summed up using an op amp. The circuit shown above is a three-input summing amplifier in the inverting mode.

b. Describe its operation. [2 marks]

Solution

In the summing amplifier circuit, the input signals V_1, V_2, and V_3 are applied to the inverting input of the op amp through input resistors R_1, R_2 and R_3 respectively.

Any number of input signals can be applied to the inverting input in the above manner.

Non-inverting input of the op amp is grounded to GND. In this circuit, R_f is the feedback resistor whereas R_o is the output resistor.

c. Derive its transfer function equation and determine it when the resistors R_1, R_2 and R_3 have same value. [8 marks]

Solution

By applying Kirchhoff's current law at summing junction node, we get:

$$I_1 + I_2 + I_3 = I_f + I_{pin-}$$

Since the input resistance of an ideal op amp is close to infinity and has infinite gain. We can neglect the current that flows to the inverting pin of the op amp (I_{pin-}) & voltage at the summing junction (V_s), therefore:

$$I_1 + I_2 + I_3 = I_f \qquad (1)$$

Equation (1) can be rewritten as:

$$\left(\frac{V_1}{R_1}\right)+\left(\frac{V_2}{R_2}\right)+\left(\frac{V_3}{R_3}\right)=\frac{V_s-V_o}{R_f}$$

Neglecting V_s, we get:

$$\left(\frac{V_1}{R_1}\right)+\left(\frac{V_2}{R_2}\right)+\left(\frac{V_3}{R_3}\right)=-\frac{V_o}{R_f}$$

Rearrange the equation:

$$V_o=-R_f\left[\left(\frac{V_1}{R_1}\right)+\left(\frac{V_2}{R_2}\right)+\left(\frac{V_3}{R_3}\right)\right]$$

Also,

$$V_o=-\left[\left(\frac{R_f}{R_1}\right)V_1+\left(\frac{R_f}{R_2}\right)V_2+\left(\frac{R_f}{R_3}\right)V_3\right] \qquad (2)$$

If resistor R_1, R_2 and R_3 has same value i.e. $R_1=R_2=R_3=R$, then equation (2) can be written as:

$$V_o=-\left(\frac{R_f}{R}\right)(V_1+V_2+V_3) \qquad (3)$$

If the values of R_f and R are made equal, then the equation becomes:

$$V_o=-(V_1+V_2+V_3)$$

d. Describe two applications of summing amplifier. [4 marks]

Solution

Two applications of summing amplifier are: averaging circuit and scaling amplifier.

Averaging Circuit:

An averaging circuit can be made from the summing amplifier circuit by making all input resistors equal in value i.e.

$$R_1=R_2=R_3=R$$

and the gain must be selected such that if there are *m* inputs, then

$$\frac{R_f}{R}=\frac{1}{m}$$

Scaling Amplifier:

In a scaling amplifier each input will be multiplied by a different factor and then summed together.

Scaling amplifiers are also called a weighted amplifier.

In this case different values are chosen for R_1, R_2 and R_3. The governing equation is:

$$V_o=-\left[\left(\frac{R_f}{R_1}\right)V_1+\left(\frac{R_f}{R_2}\right)V_2+\left(\frac{R_f}{R_3}\right)V_3\right]$$

9. Given in the figure below is a difference amplifier circuit.

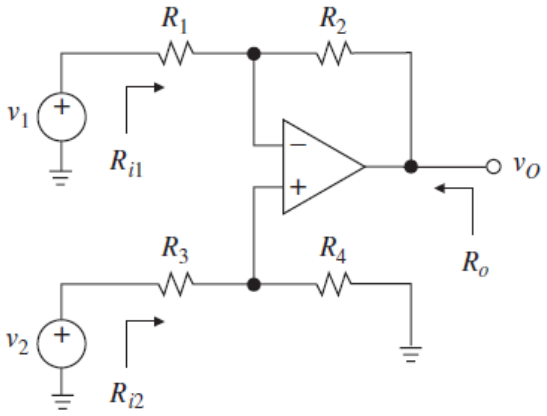

a. Describe its function. [2 marks]

Solution

Differential amplifiers amplify the difference between two voltages making this type of operational amplifier circuit a subtractor unlike a summing amplifier which adds or sums together the input voltages.

b. Derive its transfer function equation. [8 marks]

Solution

By connecting each input in turn to 0 V ground we can use superposition to solve the output voltage V_{out}.

Then the transfer function for a differential amplifier circuit is given as:

$$I_1 = \frac{V_1 - V_a}{R_1} \qquad I_2 = \frac{V_2 - V_b}{R_2} \qquad I_f = \frac{V_a - V_{out}}{R_3}$$

At summing point, $V_a = V_b$ and

$$V_b = V_2\left(\frac{R_4}{R_2 + R_4}\right)$$

If $V_2 = 0$, then

$$V_{out(a)} = -V_1\left(\frac{R_3}{R_1}\right)$$

If $V_1 = 0$, then

$$V_{out(b)} = V_2\left(\frac{R_4}{R_2 + R_4}\right)\left(\frac{R_1 + R_3}{R_1}\right)$$

But,

$$V_{out} = -V_{out(a)} + V_{out(b)}$$

Finally

$$V_{out} = -V_1\left(\frac{R_3}{R_1}\right) + V_2\left(\frac{R_4}{R_2 + R_4}\right)\left(\frac{R_1 + R_3}{R_1}\right)$$

When resistors, $R_1 = R_2$ and $R_3 = R_4$ the above transfer function for the differential amplifier can be simplified to the following expression:

$$V_{out} = \frac{R_3}{R_1}(V_2 - V_1)$$

c. Describe two of its applications in practice. [4 marks]

Solution

Two applications of the difference amplifier in practice: Wheatstone bridge differential amplifier and light activated differential amplifier.

Wheatstone Bridge Differential Amplifier

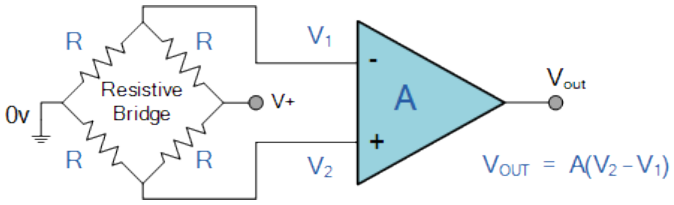

The standard Differential Amplifier circuit now becomes a differential voltage comparator by "comparing" one input voltage to the other.

By connecting one input to a fixed voltage reference set up on one leg of the resistive bridge network and the other to either a "Thermistor" or a "Light Dependent Resistor", the amplifier circuit can be used to detect either low or high levels of temperature or light.

In this case the output voltage becomes a linear function of the changes in the active leg of the resistive bridge.

Light Activated Differential Amplifier

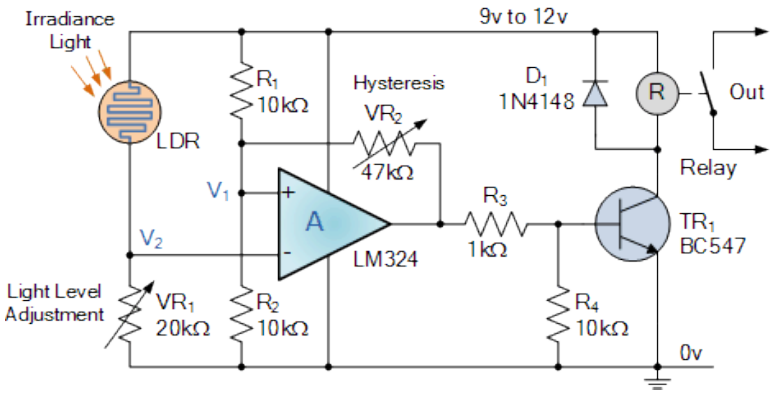

The circuit above acts as a light-activated switch which turns the output relay either "ON" or

"OFF" as the light level detected by the LDR resistor exceeds or falls below some pre-set value.

A fixed voltage reference is applied to the non-inverting input terminal of the op-amp via the $R_1 - R_2$ voltage divider network.

10. For a commonly found example of an instrumentation amplifier as shown in the figure below:

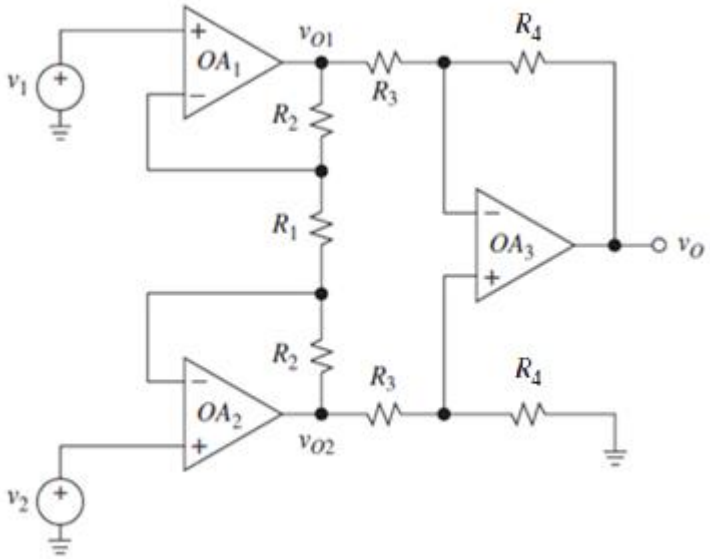

a. Describe its function. [2 marks]

Solution

Functions of instrumentation amplifier are:

- Instrumentation amplifiers (in-amps) are very high gain differential amplifiers which have a high input impedance and a single ended output. Instrumentation amplifiers are mainly used to amplify very small differential signals from strain gauges, thermocouples or current sensing devices in motor control systems.
- Unlike standard operational amplifiers in which their closed-loop gain is determined by an external-resistive feedback connected between their output terminal and one input terminal, either positive or negative.
- Instrumentation amplifiers have an internal feedback resistor that is effectively isolated from its input terminals as the input signal is applied across two differential inputs, V_1 and V_2.
- The instrumentation amplifier also has a very good common mode rejection ratio, CMRR (zero output when $V_1 = V_2$) well in excess of 100 dB at DC.

b. Describe its operation. [4 marks]

Solution

In the given instrumentation amplifier circuit, the two non-inverting amplifiers form a differential input stage acting as buffer amplifiers with a gain of $1 + 2R_2/R_1$ for differential input signals and unity gain for common mode input signals.

Since amplifiers OA_1 and OA_2 are closed loop negative feedback amplifiers, we can expect the voltage at V_{O1} to be equal to the input voltage V_1. Likewise, the voltage at V_{O2} to be equal to the value at V_2.

As the op-amps take no current at their input terminals (virtual earth), the same current must flow through the three resistors network of R_2, R_1 and R_2 connected across the op-amp outputs.

This means then that the voltage on the upper end of R_1 will be equal to V_1 and the voltage at the lower end of R_1 to be equal to V_2.

This produces a voltage drop across resistor R_1 which is equal to the voltage difference between inputs V_1 and V_2, the differential input voltage.

Because the voltage at the summing junction of each amplifier, V_{O1} and V_{O2} is equal to the voltage applied to its positive inputs.

However, if a common-mode voltage is applied to the amplifiers' inputs, the voltages on each side of R_1 will be equal, and no current will flow through this resistor.

Since no current flows through R_1 (nor, therefore, through both R_2 resistors, amplifiers A_1 and A_2 will operate as unity-gain followers (buffers).

Since the input voltage at the outputs of amplifiers A_1 and A_2 appears differentially across the three resistors network, the differential gain of the circuit can be varied by just changing the value of R_1.

The voltage output from the differential op-amp A_3 acting as a subtractor, is simply the difference between its two inputs ($V_2 - V_1$) and which is amplified by the gain of A_3 which may be one, unity, (assuming that $R_3 = R_4$).

c. Derive the expression for its output voltage. [15 marks]

Solution

Input buffer part:

Referring to buffer circuit below, top output voltage v_{o1} is:

$$v_{o1} = v_1\left(\frac{R_G}{R_G + R_3}\right)$$

Bottom output voltage v_{o2} is:

$$v_{o2} = v_2\left(\frac{R_G}{R_G + R_3}\right)$$

Thus,

$$v_{o1} - v_{o2} = (v_1 - v_2)\left(\frac{R_G}{R_G + R_3}\right)$$

Gain of input buffers:

$$A_{\text{buffer}} = 1 + \frac{2R_3}{R_G}$$

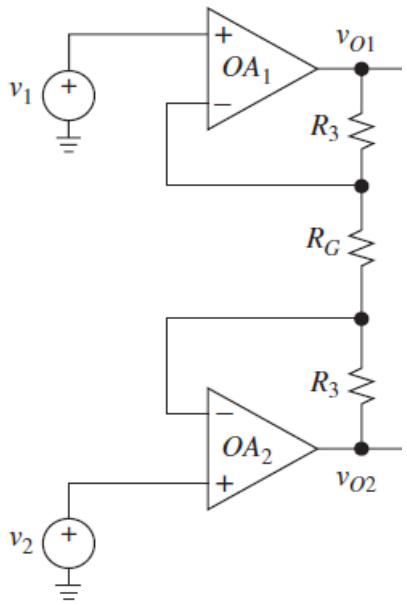

Difference amplifier part:

Referring to difference amplifier circuit below, the output voltage:

$$v_o = \left(\frac{R_2'}{R_1'}\right)\left[\left(\frac{1 + \frac{R_1'}{R_2'}}{1 + \frac{R_3'}{R_4'}}\right)v_2 - v_1\right]$$

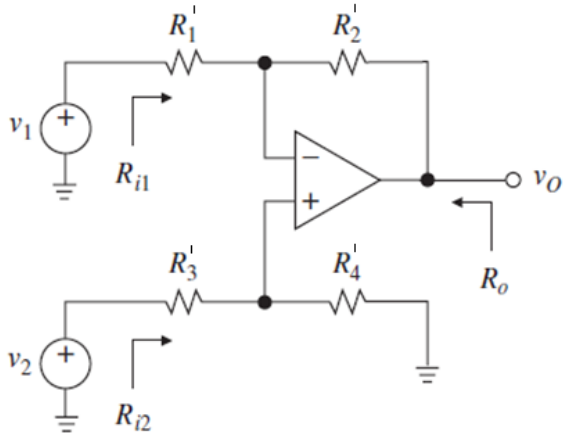

When $R_1' = R_3' = R_1$ and $R_2' = R_4' = R_2$, the output voltage is:

$$v_o = \left(\frac{R_2}{R_1}\right)(v_2 - v_1)$$

Thus, gain of difference amplifier is:

$$A_{\text{difference}} = \frac{R_2}{R_1}$$

Overall gain:

$$A_{\text{overall}} = A_{\text{buffer}} A_{\text{difference}}$$

The output voltage of instrumentation amplifier:

$$v_o = \left(\frac{R_2}{R_1}\right)\left(1 + \frac{2R_3}{R_G}\right)(v_2 - v_1)$$

d. When all resistors are made equal to 10 kΩ and R_G is equal to 2 kΩ, determine the output voltage when the input voltages are V_1 = 100 mV and V_2 = 200 mV. [10 marks]

Solution

When all resistors are made equal to 10 kΩ and R_G is equal to 2 kΩ, this produces a voltage drop between nodes v_{o1} and v_{o2} equal to:

$$V_{v_{o1-2}} = \left(1 + \frac{2R}{R_G}\right)(V_2 - V_1)$$

The regular differential amplifier on the right-hand side of the circuit then takes this voltage drop between points 3 and 4 and amplifies it by a gain of 1 (assuming again that all "R" resistors are of equal value).

Knowing V_1 = 100 mV and V_2 = 200 mV, the output voltage is given by the following equation:

$$V_o = \left(1 + \frac{2R}{R_G}\right)(V_2 - V_1)$$

Put relevant values into the equation, the output voltage of the amplifier is:

$$V_o = \left[1 + \frac{2(10\ \text{k}\Omega)}{2\ \text{k}\Omega}\right](200\ \text{mV} - 100\ \text{mV}) = 1.1\ \text{Volts}$$

D. Op Amp based Circuits II

11. Consider the comparator circuit shown in the figure below, whose output saturates at ±13 V.

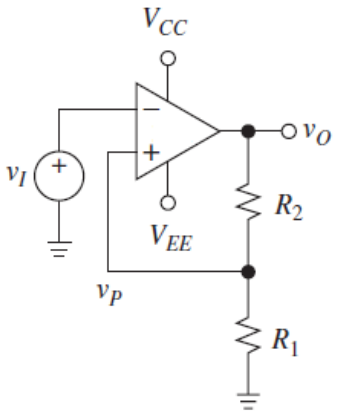

a. Derive the equation for the hysteresis of the comparator circuit. [5 marks]

Solution

With $V_{OH} = V_{CC}$, the high-threshold point (V_{TH}) of the comparator is:

$$V_{TH} = \left(\frac{R_1}{R_1 + R_2}\right) V_{CC}$$

With $V_{OL} = V_{EE}$, the lower-threshold point (V_{TL}) of the comparator is:

$$V_{TL} = \left(\frac{R_1}{R_1 + R_2}\right) V_{EE}$$

The equation for the hysteresis of the comparator circuit is:

$$\Delta V_T = V_{TH} - V_{TL} = \left(\frac{R_1}{R_1 + R_2}\right)(V_{CC} - V_{EE})$$

b. Calculate values for R_1 and R_2 to give a hysteresis of 0.5 V. [5 marks]

Solution

Hysteresis of the voltage comparator circuit is calculated from:

$$\Delta V_T = \left(\frac{R_1}{R_1 + R_2}\right)(V_{CC} - V_{EE})$$

$$= \left(\frac{1}{1 + \frac{R_2}{R_1}}\right)[13 - (-13)] = 0.5$$

As a result, $R_2 = 51R_1$. Pick R_1 to be equal to 1 kΩ, as a result R_2 is 51 kΩ.

c. Sketch the voltage transfer curve of the comparator assuming hysteresis of 0.5 V. [5 marks]

Solution

Shown below is a hysteresis waveform plot of the comparator circuit with the low threshold (V_{TL}) and high threshold (V_{TH}) voltages and low output (V_{OL}) and high output (V_{OH}) voltages as indicated on the diagram.

$$\Delta V_t = V_{TH} - V_{TL} = 0.5$$

So, the threshold voltages of the comparator circuit are:

$$V_{TH} = 0.25\ \text{V} \qquad \text{and} \qquad V_{TL} = -0.25\ \text{V}$$

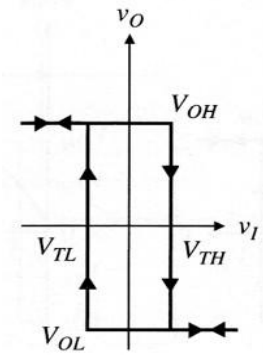

d. Sketch the expected output waveform, V_o against time when V_i is a peak-to-peak voltage, 100 Hz ac-coupled triangle wave. Include the input waveform in your plot, as well as coordinates to clearly identify when transitions occur in the output waveform. [5 marks]

Solution

The expected output waveform of the comparator circuit against time when the input voltage is ac-coupled triangle wave is illustrated below:

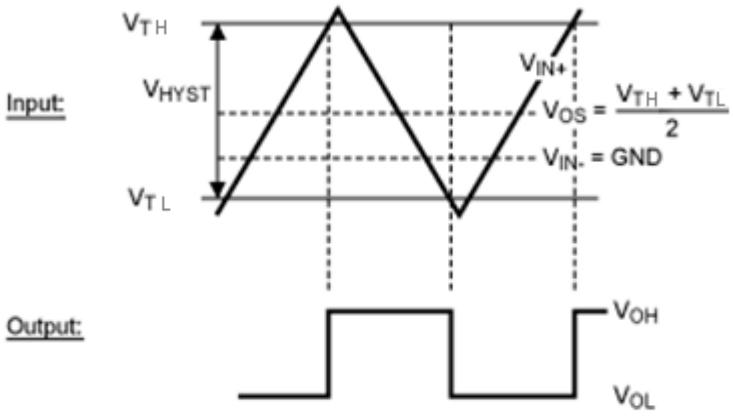

12. Given in the figure below is a Wien-Bridge oscillator circuit.

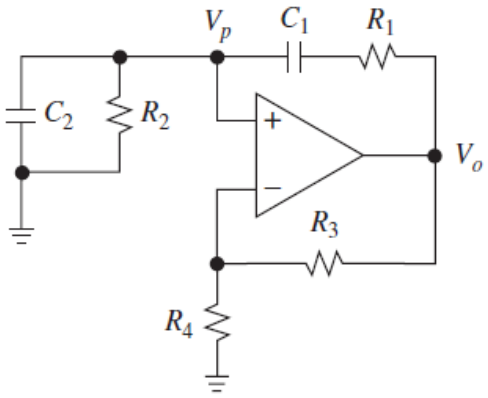

a. Describe the effect of reducing resistance of the Wien-Bridge oscillator on its frequency. [2 marks]

Solution

In a Wien-Bridge oscillator, if the resistances in the positive feedback circuit are decreased, the frequency increases.

b. Derive the equation for the feedback gain (β) on the oscillator circuit. [10 marks]

Solution

By applying voltage divider rule, the voltage of the RC network e.g. V_p is found from:

$$V_p(s) = V_o(s)\left(\frac{Z_2(s)}{Z_1(s) + Z_2(s)}\right)$$

Where:

$$Z_1(s) = R_1 + \frac{1}{sC_1} \qquad Z_2 = R_2 \parallel \frac{1}{sC_2} = \frac{R_2}{1 + sC_2R_2}$$

The two RC Networks must (may) have equal resistors and capacitors e.g. $R_1 = R_2 = R$ and $C_1 = C_2 = C$.

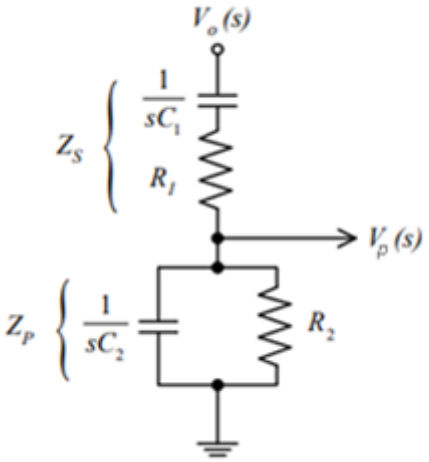

Feedback gain of the circuit (β) is found from the following

$$\beta = \frac{V_p(s)}{V_o(s)} = \left(\frac{Z_2(s)}{Z_1(s) + Z_2(s)}\right) = \frac{\left(\frac{R_2}{1 + sC_2R_2}\right)}{\left(R_1 + \frac{1}{sC_1}\right) + \left(\frac{R_2}{1 + sC_2R_2}\right)}$$

So, rearranging the equation above, the feedback gain of the circuit is:

$$\beta = \left(\frac{sRC}{s^2R^2C^2 + 3sRC + 1}\right) \qquad (Eq.1)$$

c. If in the circuit given above $R_1 = R_2 = R$ = 10 kΩ and $C_1 = C_2 = C$ = 10 nF, calculate the resonant frequency, the gain of the amplifier, and the values of resistors R_3 and R_4.

[10 marks]

Solution

The transfer function of the Wien-Bridge oscillator is given as:

$$\frac{V_o}{V_i} = \frac{j\omega C_1R_2}{1 + j\omega(C_1R_2 + C_2R_2 + C_1R_1) - \omega^2(C_1C_2R_1R_2)}$$

The condition for zero-phase shift is given as:

$$\omega^2 = \frac{1}{C_1C_2R_1R_2}$$

Equating R_1 to R_2 to be equal to 10 kΩ and C_1 to C_2 to be equal to 10 nF, this results in the resonance frequency of the oscillator,

$$f_r = \frac{1}{2\pi\sqrt{C_1C_2R_1R_2}} = \frac{1}{2\pi\sqrt{10 \times 10^{-9} \times 10 \times 10^{-9} \times 10 \times 10^3 \times 10 \times 10^3}} = 1.59 \times 10^3$$

Finally, the transfer function becomes:

$$\frac{V_o}{V_i} = \frac{C_1R_2}{C_1R_2 + C_2R_2 + C_1R_1}$$

At resonance frequency, the overall gain of the oscillator is:

$$\frac{V_o}{V_i} = \frac{1}{3} = 0.33$$

Thus, to meet the Barkhausen criteria, the voltage gain of the inverting amplifier is:

$$A_v = -\left(1 + \frac{R_3}{R_4}\right) = -3$$

As a result, the values of the resistors are:

$$R_4 = 1\ \text{k}\Omega \quad \text{and} \quad R_3 = 2\ \text{k}\Omega$$

d. Describe two applications of the oscillator given above. [2 marks]

Solution

Wien-Bridge oscillator is used in function generator producing reference signals and providing timing features for digital application.

SELECTIVE FORMULAE IN ANALOGUE ELECTRONICS

Operational Amplifier:

$$A_{DM} = \frac{R_2}{R_1}\left[1 - \frac{\in (R_1+2R_2)}{2(R_1+R_2)}\right] \qquad \text{and} \qquad A_{CM} = \frac{R_2 \in}{(R_1 + R_2)}$$

$$CMRR = 20\log\left|\frac{A_{DM}}{A_{CM}}\right|$$

Inverting Amplifier:

$$V_{out} = -\left(\frac{R_2}{R_1}\right)V_{in}$$

Non-Inverting Amplifier:

$$V_{out} = \left(1 + \frac{R_2}{R_1}\right)V_{in}$$

Summing Amplifier:

$$V_{out} = \left(\frac{R_f}{R_1}V_1 + \frac{R_f}{R_2}V_2 + \frac{R_f}{R_3}V_3 + \cdots\right)$$

Difference Amplifier:

$$v_{out} = \frac{R_2}{R_1}\left[\left(\frac{1 + \frac{R_1}{R_2}}{1 + \frac{R_3}{R_4}}\right)v_2 - v_1\right]$$

Instrumentation Amplifier:

$$v_{out} = \left(\frac{R_2}{R_1}\right)\left(1 + \frac{2R_3}{R_G}\right)(v_1 - v_2)$$

Comparator:

$$\Delta V_t = V_{TH} - V_{TL}$$

$$\Delta V_T = \left(\frac{R_1}{R_1 + R_2}\right) \times (V_{OH} - V_{OL})$$

Oscillator (Wien-Bridge):

$$\frac{V_o}{V_i} = \frac{j\omega C_1 R_2}{1 + j\omega(C_1R_2 + C_2R_2 + C_1R_1) - \omega^2(C_1C_2R_1R_2)}$$

$$\omega^2 = \frac{1}{C_1C_2R_1R_2}$$