XMUT303 Analogue Electronics

Mid-Term Test Revision Questions

A. Operational Amplifier

1. An engineer in an electronic manufacturing company implements an inverting amplifier using an op amp, as shown in the figure below, but finds that the circuit picks up interference, presumably due to a ground loop.

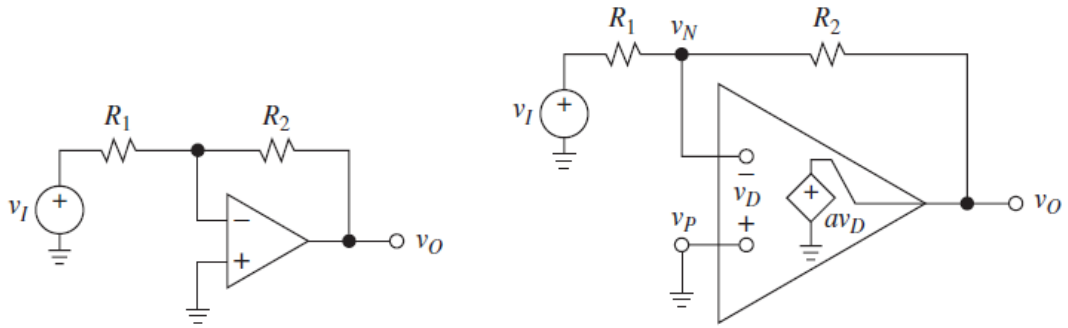

a. Providing an expression for the transfer function equation of the ideal inverting amplifier circuit given above, proof that the transfer function equation of practical inverting amplifier with a finite open-loop gain (a) is as given below. [4 marks]

$$\frac{V_O}{V_I} = -\left(\frac{R_2}{R_1}\right)\left(\frac{1}{1+(1+R_2/R_1)/a}\right)$$

b. Calculate the output voltage of the ideal and practical inverting amplifier circuit with a finite open-loop gain, given signal at the input of the amplifier is 2 Volts and the values of the resistors are R_1 = 2 kΩ, R_2 = 12 kΩ, and a = 10^6 V/V. [4 marks]

c. Compare the performance of the ideal and practical inverting amplifier circuit with a finite open-loop gain as in part (b). With the aid of diagrams, suggest two ways that the engineer could do to reduce the noise level on the output. [2 marks]

2. Consider the difference amplifier shown in the figure below.

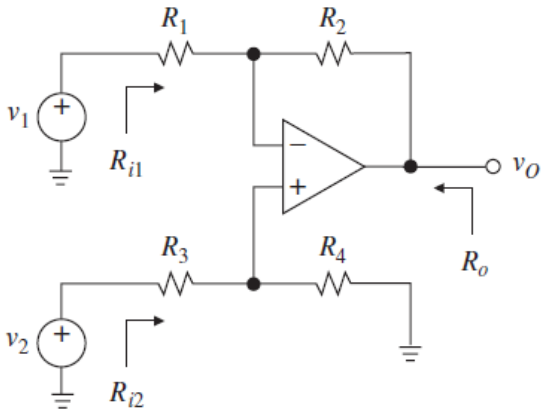

a. State an equation that best explain the output voltage, v_o, expressed in terms of the input voltages, v_1 and v_2 of the circuit given above. [2 marks]

b. What is the common-mode gain (A_{CM}), differential-mode gain (A_{DM}) and common-mode rejection ratio (CMRR)? [3 marks]

c. Calculate the common-mode gain, A_{CM} (dB), the differential-mode gain, A_{DM} (dB), and the common-mode rejection ratio, CMRR (dB) for the given circuit. Knowing that $R_1 = 1\ \text{k}\Omega$, $R_2 = 10\ \text{k}\Omega$ and component mismatch, ε = 0.01 [10 marks]

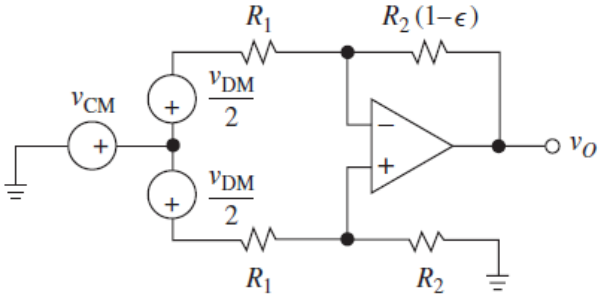

3. Considering the nulling circuit for an inverting amplifier shown in the figure as given below, the resistors R_1 = 1 kΩ and R_2 = 22 kΩ and supply voltages of V_{CC} = +15 V and V_{EE} = -15 V.

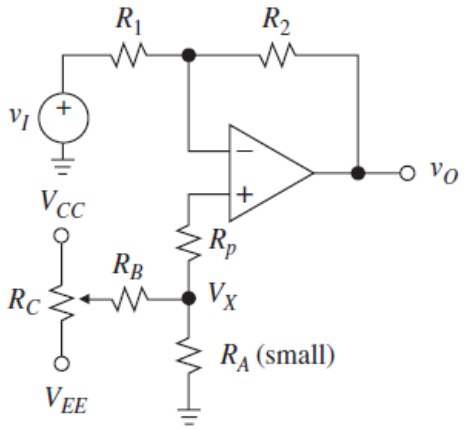

The op amp used is an LM324, which has parasitic parameters as follows:

- nominal input offset voltage, V_{OS} ≤ 3 mV,

- input bias current, I_B ≤ 100 nA,
- input offset current, I_{OS} ≤ 30 nA.

a. Describe nulling circuit. [2 marks]

b. Describe three types of nulling circuit in practice. [3 marks]

c. The resistors R_A, R_B, R_C, and R_P are included in the circuit to reduce the effects of these parasitic parameters. Give appropriate values for R_A, R_B, R_C, and R_P. Show your working and explain your reasoning. [15 marks]

4. You are given the following two-op amp instrumentation circuit in the figure below.

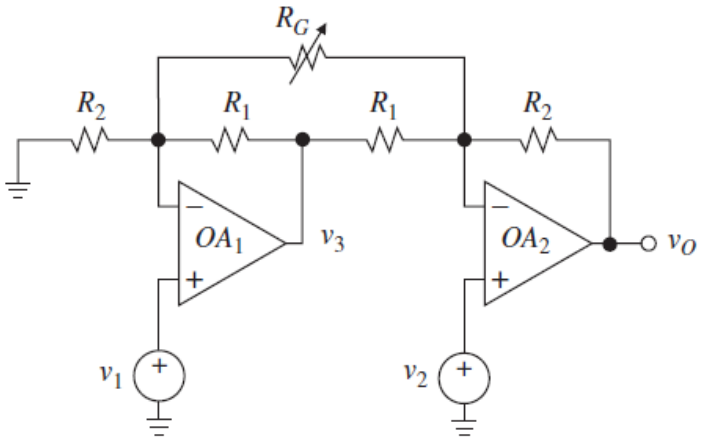

a. Why are instrumentation amplifiers commonly manufactured as monolithic integrated circuits? [2 marks]

b. If you must design an op amp-based amplifier in cascading arrangement, what circuit feature usually do you have at the output stage? Give two reasons for your answer. [2 marks]

c. State an expression for the gain, $\frac{v_o}{v_2 - v_1}$, for the circuit shown in the circuit above. [5 marks]

d. Calculate the minimum gain of the circuit shown above if R_1 = 1 kΩ and R_2 = 10 kΩ. [2 marks]

B. Op Amp Analysis

5. Given in the figure below a circuit diagram of op amp loaded with a resistive load and an imperfect voltage source.

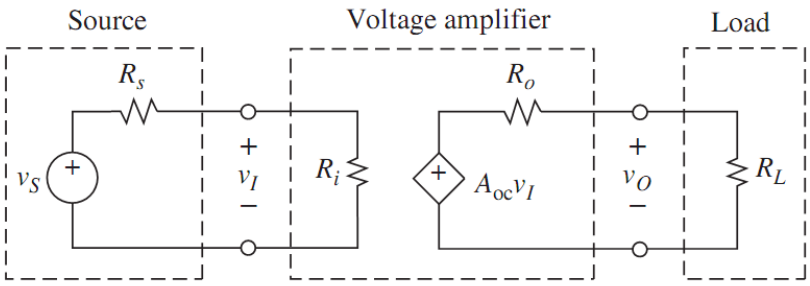

a. Describe the difference between op amp with FET input stages with those with BJT transistors. [2 marks]

b. The amplifier above has R_i = 100 kΩ, A_{oc} = 100 V/V, and R_o = 1 Ω and is driven by a source with R_s = 25 kΩ and drives a load R_l = 3 Ω. Calculate attenuation at the input, the attenuation at the output, the overall gain, and comment on the result. [10 marks]

6. Given in the figure below is a frequency response of an open loop voltage amplifier.

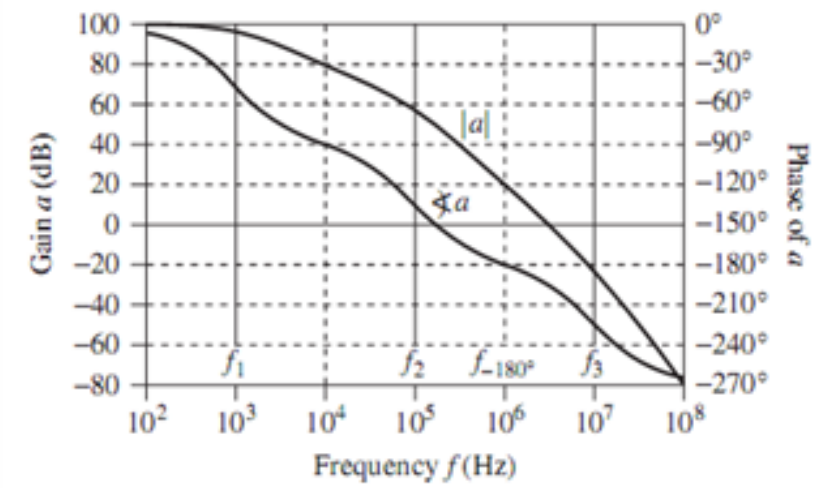

a. Estimate the phase margin and gain margin of the amplifier above. [10 marks]

b. With your estimation on the phase and gain margin, is the amplifier stable or it is not stable? [2 marks]

c. If you must redesign the above amplifier, what do you do to make the amplifier to be stable? [2 marks]

7. For a given op amp circuit diagram shown in the figure below.

a. What are bias current and offset current in an op amp? [2 marks]

b. Let R_1 = 22 kΩ and R_2 = 2.2 MΩ, and let the op amp ratings be I_B = 80 nA and I_{OS} = 20 nA. Calculate the output error of the amplifier given above due to input bias current. [10 marks]

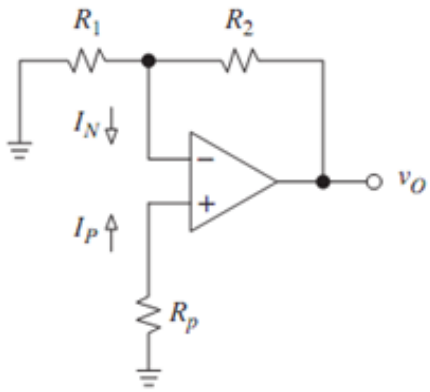

C. Op Amp based Circuits I

8. Given in the figure below is a summing amplifier.

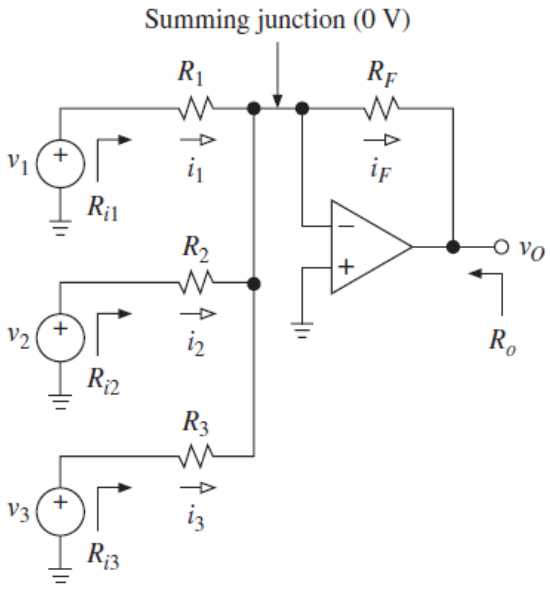

a. Describe the summing amplifier. [2 marks]

b. Describe its operation. [2 marks]

c. Derive its transfer-function equation and determine it when the resistors R_1, R_2 and R_3 have same value. [8 marks]

d. Describe two applications of summing amplifier. [4 marks]

9. Given in the figure below is a difference amplifier

a. Describe its function. [2 marks]

b. Derive its transfer-function equation. [8 marks]

c. Describe two of its applications in practice. [4 marks]

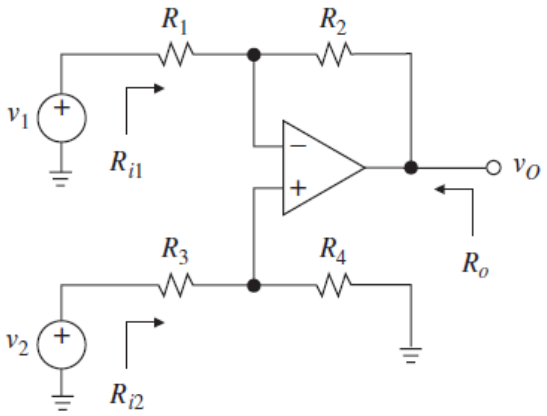

10. For a commonly found example of an instrumentation amplifier as shown in the figure below:

    a. Describe its function. [2 marks]

    b. Describe its operation. [4 marks]

    c. Derive the expression for its output voltage. [15 marks]

    d. When all resistors are made equal to 10 kΩ and R_G is equal to 2 kΩ, determine the output voltage when the input voltages are V_1 = 100 mV and V_2 = 200 mV. [10 marks]

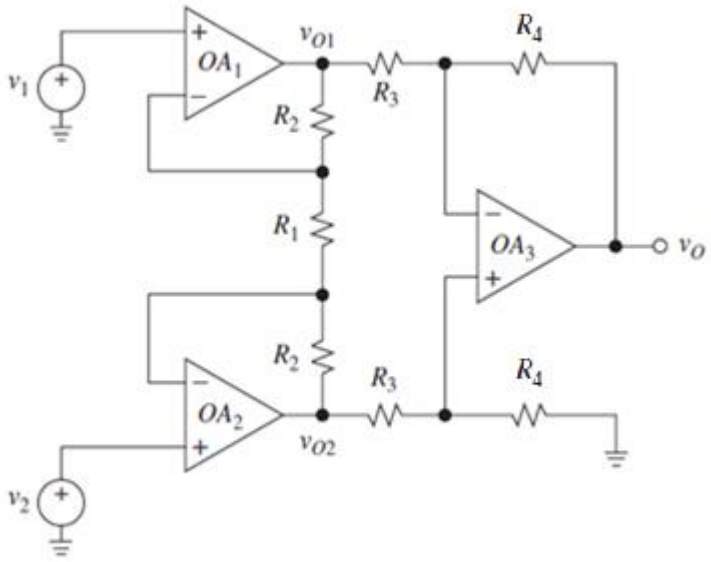

D. Op Amp based Circuits II

11. Consider the comparator circuit shown in the figure below, whose output saturates at ±13 V.

    a. Derive the equation for the hysteresis of the comparator circuit. [5 marks]

    b. Calculate values for R_1 and R_2 to give a hysteresis of 0.5 V. [5 marks]

    c. Sketch the voltage transfer curve of the comparator assuming hysteresis of 0.5 V. [5 marks]

    d. Sketch the expected output waveform, V_o against time when V_i is a peak-to-peak voltage, 100

Hz ac-coupled triangle wave. Include the input waveform in your plot, as well as coordinates to clearly identify when transitions occur in the output waveform. [5 marks]

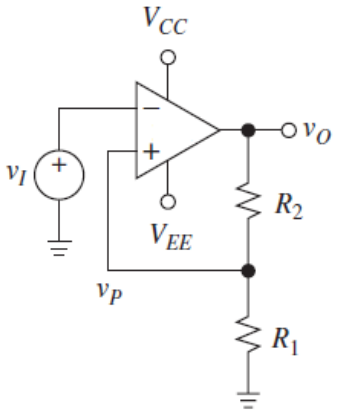

12. Given in the figure below is a Wien-Bridge oscillator circuit.

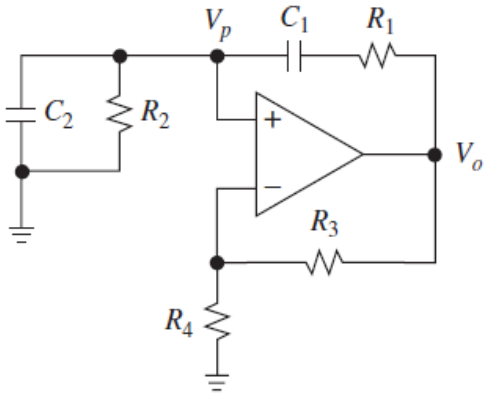

a. Describe the effect of reducing resistance of the Wien-Bridge oscillator on its frequency. [2 marks]

b. Derive the equation for the feedback gain (β) on the oscillator circuit. [10 marks]

c. Calculate the resonant frequency and gain of the circuit given above if $R_1 = R_2$ = R = 10 kΩ and $C_1 = C_2$ = C = 10 nF and determine the values of resistors R_3 and R_4. [10 marks]

d. Describe two applications of the oscillator given above. [2 marks]

SELECTIVE FORMULAE IN ANALOGUE ELECTRONICS

Operational Amplifier:

$$A_{DM} = \frac{R_2}{R_1}\left[1 - \frac{\in (R_1+2R_2)}{2(R_1+R_2)}\right] \qquad \text{and} \qquad A_{CM} = \frac{R_2 \in}{(R_1 + R_2)}$$

$$CMRR = 20\log\left|\frac{A_{DM}}{A_{CM}}\right|$$

Inverting Amplifier:

$$V_{out} = -\left(\frac{R_2}{R_1}\right)V_{in}$$

Non-Inverting Amplifier:

$$V_{out} = \left(1 + \frac{R_2}{R_1}\right)V_{in}$$

Summing Amplifier:

$$V_{out} = \left(\frac{R_f}{R_1}V_1 + \frac{R_f}{R_2}V_2 + \frac{R_f}{R_3}V_3 + \cdots\right)$$

Differential Amplifier:

$$v_{out} = \frac{R_2}{R_1}\left[\left(\frac{1 + \frac{R_1}{R_2}}{1 + \frac{R_3}{R_4}}\right)v_2 - v_1\right]$$

Instrumentation Amplifier:

$$v_{out} = \left(\frac{R_2}{R_1}\right)\left(1 + \frac{2R_3}{R_G}\right)(v_1 - v_2)$$

Comparator:

$$\Delta V_t = V_{TH} - V_{TL}$$

$$\Delta V_T = \left(\frac{R_1}{R_1 + R_2}\right) \times (V_{OH} - V_{OL})$$

Oscillator (Wien-Bridge):

$$\frac{V_o}{V_i} = \frac{j\omega C_1 R_2}{1 + j\omega(C_1R_2 + C_2R_2 + C_1R_1) - \omega^2(C_1C_2R_1R_2)}$$

$$\omega^2 = \frac{1}{C_1C_2R_1R_2}$$