XMUT303 Analogue Electronics

Tutorial 1: Operational Amplifier (Solution)

A. Operational Amplifiers

1. Given below is an example of generalised op amp-based voltage amplifier. Note that the output port of the amplifier is modelled with a voltage-controlled voltage source.

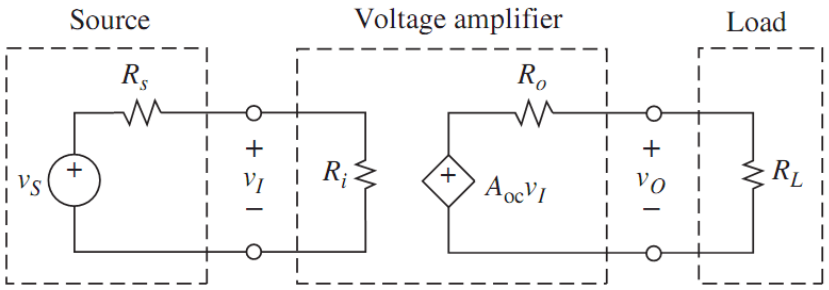

   a. Derive an expression of v_o (output voltage) in term of v_s (input/source voltage) for the amplifier given above. [6 marks]

   b. The amplifier above has R_i = 100 kΩ, A_{oc} = 100 V/V, and R_o = 1 Ω and is driven by a source with R_s = 25 kΩ and drives a load R_L = 3 Ω. Calculate the overall gain as well as the amount of input and output loading. [4 marks]

   c. Repeat, but for a source with R_s = 50 kΩ and a load R_L = 4 Ω. [4 marks]

   d. Compare result of (b) with (c) and comment on the comparison. What influence do impedances at the input and output of the op amp have on the amplifier? [4 marks]

Solution

For a given voltage amplifier, it is loaded at the input with a voltage source and at the output with a load resistor:

a. By applying voltage divider formulae at the output, we obtain:

$$v_o = \left(\frac{R_L}{R_o + R_L}\right) A_{oc} v_i$$

Applying voltage divider formulae at the input port yields:

$$v_i = \left(\frac{R_i}{R_S + R_i}\right) v_s$$

Eliminating v_i and rearranging the above equations, we obtain the source-to-load gain:

$$\frac{v_o}{v_s} = \left(\frac{R_i}{R_s + R_i}\right) A_{oc} \left(\frac{R_L}{R_o + R_L}\right)$$

Where:

- R_s = source resistance
- R_i = input resistance of the amplifier
- R_o = output resistance of the amplifier
- R_L = load resistance
- A_{oc} = voltage gain factor (expressed in Volt per Volt)

b. By using the equation given in (a), we obtain the overall gain of the amplifier:

$$\frac{v_o}{v_s} = \left(\frac{R_i}{R_s + R_i}\right) A_{oc} \left(\frac{R_L}{R_o + R_L}\right)$$

As a result, the overall gain for the first case is

$$\frac{v_o}{v_s} = \left(\frac{100\ \text{k}\Omega}{25\ \text{k}\Omega + 100\ \text{k}\Omega}\right)(100)\left(\frac{3\ \Omega}{1\ \Omega + 3\ \Omega}\right) = (0.8)(100)(0.75) = 60$$

This is less than 100 V/V because of loading.

c. By the same equation, we obtain the voltage gain for the second case:

$$\frac{v_o}{v_s} = \left(\frac{100\ \text{k}\Omega}{50\ \text{k}\Omega + 100\ \text{k}\Omega}\right)(100)\left(\frac{4\ \Omega}{1\ \Omega + 4\ \Omega}\right) = (0.67)(100)(0.80) = 53.3$$

We now have more loading at the input but less loading at the output. Moreover, the overall gain has changed from 60 V/V to 53.3 V/V.

d. For the first case, input loading causes the source voltage to drop to 80% of its unloaded value; output loading introduces an additional drop to 75%. For the second case, we have more loading at the input but less loading at the output.

Moreover, the overall gain has changed from 60 V/V in the first case to 53.3 V/V in the second case respectively.

The input impedance reduces the input voltage that is applied to the input of the op amp and the output impedance reduces the output voltage delivered to the load.

The input and output impedances in the op amp also reduce the efficiency of the amplifier as some of the electrical energies are dissipated on these unwanted impedances.

2. Unlike the ideal op amp that has an infinite open loop gain (a), a practical op amp has a finite open loop gain. Given in the figures shown below (a) a non-inverting amplifier and (b) a circuit model for its analysis.

   a. Derive an expression for v_o for the amplifier given below that take into account the influence of finite open-loop gain (a). [12 marks]

   b. Let v_i = 1 V, R_1 = 2 kΩ, and R_2 = 18 kΩ. Find v_o if:

      i. Gain a = 10^2 V/V. [4 marks]

      ii. Gain a = 10^4 V/V. [4 marks]

      iii. Gain a = 10^6 V/V. [4 marks]

   c. Comment on your findings. How does the finite gain of the op amp affect the amplifier circuit? [4 marks]

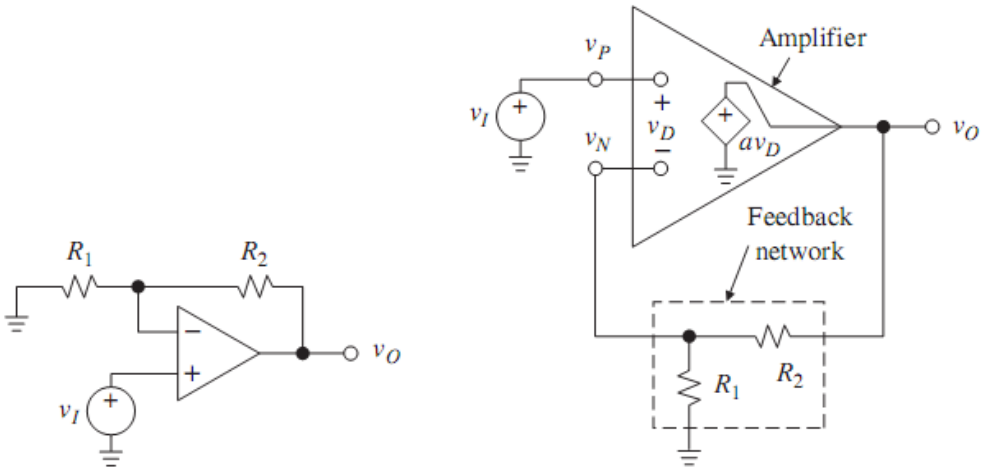

Solution

a. For non-inverting amplifier as given above, by inspection

$$v_P = v_i$$

Using voltage divider formulae, this yields:

$$v_N = \left(\frac{R_1}{R_1 + R_2}\right) v_o$$

Or

$$v_N = \left(\frac{1}{1 + R_2/R_1}\right) v_o$$

Letting

$$v_o = a(v_P - v_N)$$

We get as follows

$$v_o = a\left[v_i - \left(\frac{1}{1 + R_2/R_1}\right) v_o\right]$$

Collecting terms and solving for the ratio of v_i/v_o, which is designated as A and rearrangement of the equation:

$$A = \frac{v_o}{v_i} = \left(1 + \frac{R_2}{R_1}\right)\left(\frac{1}{1 + (1 + R_2/R_1)/a}\right)$$

b. By using the equation given in (a) and let v_i = 1 V, R_1 = 2 kΩ, and R_2 = 18 kΩ, this gives:

$$\frac{v_o}{1} = \left(1 + \frac{18\text{k}\Omega}{2\text{k}\Omega}\right)\left(\frac{1}{(1 + 18\text{k}\Omega/2\text{k}\Omega)/a}\right)$$

Or

$$v_o = \frac{10}{(1 + 10/a)}$$

So

i. For $a = 10^2$ V/V, the output voltage is:

$$v_o = \frac{10}{(1 + 10/10^2)} = 9.091$$

ii. For $a = 10^4$ V/V, the output voltage is:

$$v_o = \frac{10}{(1 + 10/10^4)} = 9.990$$

iii. For $a = 10^6$ V/V, the output voltage is:

$$v_o = \frac{10}{(1 + 10/10^4)} = 9.9999$$

c. The higher the gain a, the closer v_o is to 10.0 V. For a given input voltage, the finite gain of op amp reduces the observed output voltage of the amplifier.

3. Given below is a difference amplifier circuit with input voltage sources v_1 and v_2 at the inverting and non-inverting pins of the op amp.

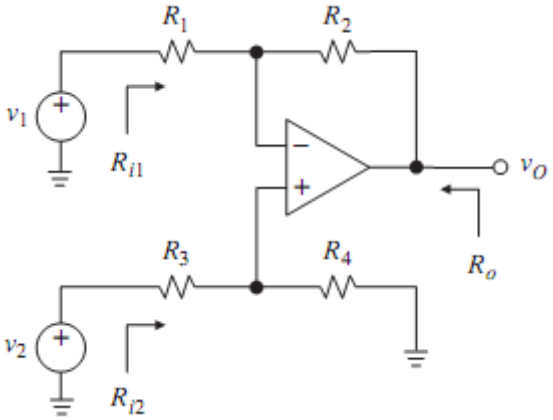

a. Prove that the output voltage of difference amplifier is given by: [20 marks]

$$v_o = \frac{R_2}{R_1}\left[\left(\frac{1 + R_1/R_2}{1 + R_3/R_4}\right)v_2 - v_1\right]$$

And

$$R_{i1} = R_1 \qquad R_{i2} = R_3 + R_4 \qquad R_0 = 0$$

b. Design a difference amplifier circuit such that $v_o = v_2 - 3v_1$ and $R_{i1} = R_{i2} = 100$ kΩ. [24 marks]

Solution

a. The difference amplifier has one output and two inputs, one of which is applied to the inverting side, the other to the non-inverting side.

We can find v_o via the superposition principle as:

$$v_o = v_{o1} + v_{o2}$$

Where v_{o1} is the value of v_o with v_2 is set to zero, and v_{o2} that with v_1 is set to zero.

Top half:

Letting $v_2 = 0$ yields v_P = 0, making the circuit act as an inverting amplifier with respect to v_1. So

$$v_{o1} = -\left(\frac{R_2}{R_1}\right)v_1 \qquad (Eq.1)$$

And

$$R_{i1} = R_1$$

Where R_{i1} is the input resistance seen by the source v_1.

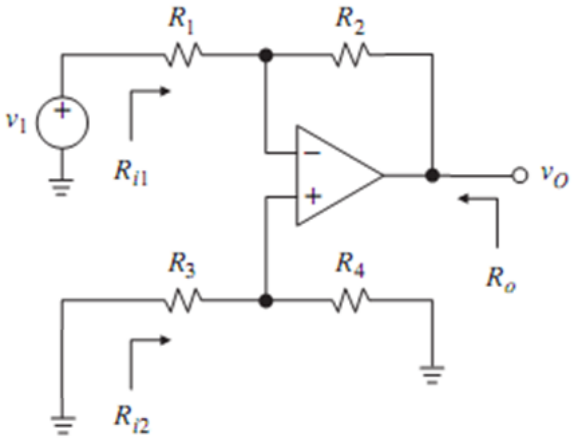

Bottom half:

Letting v_1 = 0 makes the circuit act as a non-inverting amplifier with respect to v_P. So

$$v_P = \left(\frac{R_4}{R_3 + R_4}\right) v_2 \qquad (Eq. 2)$$

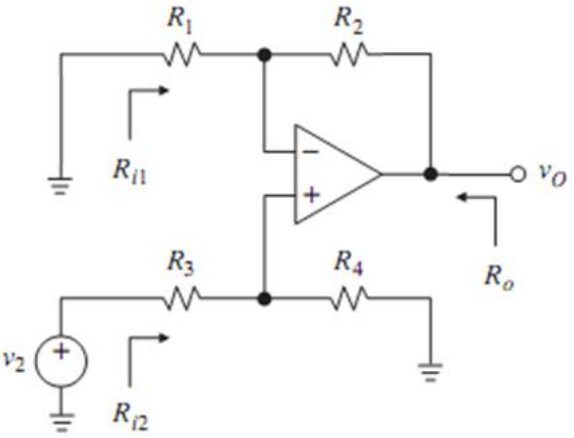

Hence

$$v_{o2} = \left(1 + \frac{R_2}{R_1}\right) v_P \qquad (Eq. 3)$$

Thus, combining equations (2) with (3)

$$v_{o2} = \left(1 + \frac{R_2}{R_1}\right) \times \left(\frac{R_4}{R_3 + R_4}\right) v_2 = \left(\frac{R_2}{R_1}\right)\left(\frac{1 + R_1/R_2}{1 + R_3/R_4}\right) v_2 \qquad (Eq. 4)$$

and

$$R_{i2} = R_3 + R_4$$

Where R_{i2} is the input resistance seen by the source v_2.

Overall:

Letting $v_o = v_{o1} + v_{o2}$, combining equations (1) and 4) and rearranging yields

$$v_o = \frac{R_2}{R_1}\left[\left(\frac{1 + R_1/R_2}{1 + R_3/R_4}\right)v_2 - v_1\right]$$

Moreover

$$R_{i1} = R_1 \qquad R_{i2} = R_3 + R_4 \qquad R_0 = 0$$

b. By using the equation from (a), we obtain the following relationships:

$$R_{i1} = R_1 \qquad R_{i2} = R_3 + R_4 \qquad R_0 = 0$$

As a result, we must have R_1 = R_{i1} = 100 kΩ.

Applying the equation to find the output voltage

$$v_o = \frac{R_2}{R_1}\left[\left(\frac{1 + R_1/R_2}{1 + R_3/R_4}\right)v_2 - v_1\right]$$

We must have $R_2/R_1 = 3$, so R_2 = 300 kΩ.

From the equation from (a)

$$R_{i1} = R_1 \qquad R_{i2} = R_3 + R_4 \qquad R_0 = 0$$

Thus, we need to have R_3+R_4 = R_{i2} = 100 kΩ.

Applying the equation for output voltage,

$$v_o = \frac{R_2}{R_1}\left[\left(\frac{1 + R_1/R_2}{1 + R_3/R_4}\right)v_2 - v_1\right]$$

This will give:

$$v_o = 3\left[\frac{(1 + 1/3)}{(1 + R_3/R_4)}\right] = 1$$

Solving the last two equations for their two unknown variables yields R_3 = 75 kΩ and R_4 = 25 kΩ. This will give $v_o = v_2 - 3v_1$.

4. You are given in the figure below a non-ideal difference amplifier:

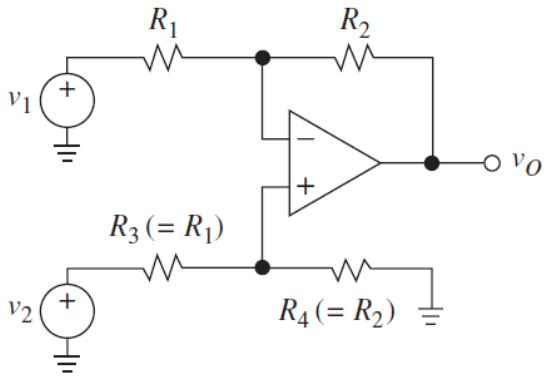

a. Proof that differential and common-mode gains of the difference amplifier with non-ideal components are given as follows: [60 marks]

$$V_O = A_{DM}V_{DM} + A_{CM}V_{CM}$$

Where:

$$A_{DM} = \frac{R_2}{R_1}\left[1 - \left(\frac{R_1+2R_2}{R_1+R_2}\right)\left(\frac{\epsilon}{2}\right)\right]$$

$$A_{CM} = \left(\frac{R_2}{R_1 + R_2}\right)\epsilon$$

$$V_{DM} = V_2 - V_1$$

$$V_{CM} = \frac{(V_2 + V_1)}{2}$$

b. If R_1 = 1 kΩ, R_2 = 2 kΩ, V_2 = 10 Volt, V_1 = 5 Volt and ϵ = 4% resistor value mismatch, find the differential mode and common mode gain of the amplifier. [4 marks]

c. Determine the output voltage of the amplifier from part (b). [6 marks]

d. Comment on the result of part (c). [4 marks]

Solution

a. There are two ways to find A_{DM} and A_{CM}:

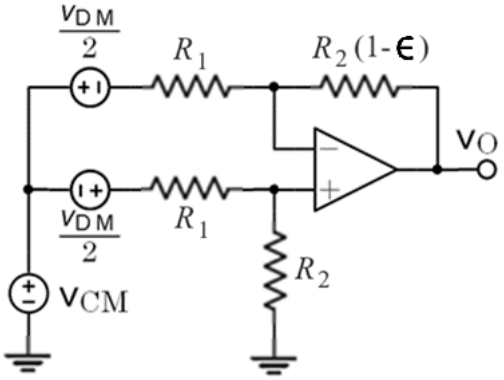

The easy way: use superposition and rules for inverting and non-inverting op amp.

The hard way: assume $V_N = V_P$, then voltage division and algebra (this is hard because of the number of terms involved).

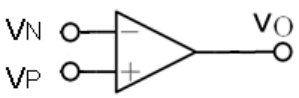

Superposition allows us to calculate the output for a circuit to multiple inputs by considering each input individually, then summing the results i.e.:

$$V_O = f(\sum V_i) \equiv V_O = \sum f(V_i)$$

In this case

$$V_O = V_{O_{V_1}} + V_{O_{V_2}}$$

Knowing that

$$V_{DM} = V_2 - V_1$$

And

$$V_{CM} = \frac{(V_2 + V_1)}{2}$$

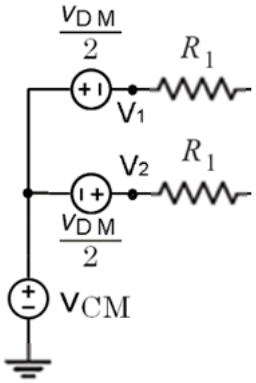

First, assume $V_2 = 0$ V

$$V_1 = V_{CM} - \frac{V_{DM}}{2}$$

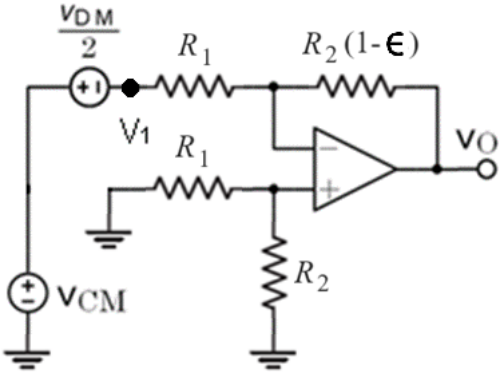

$$V_{O_{V_1}} = \left[\frac{-R_2(1-\epsilon)}{R_1}\right] V_1 = \left[\frac{-R_2(1-\epsilon)}{R_1}\right]\left(V_{CM} - \frac{V_{DM}}{2}\right)$$

Second, assume $V_1 = 0$ V

$$V_2 = V_{CM} + \frac{V_{DM}}{2}$$

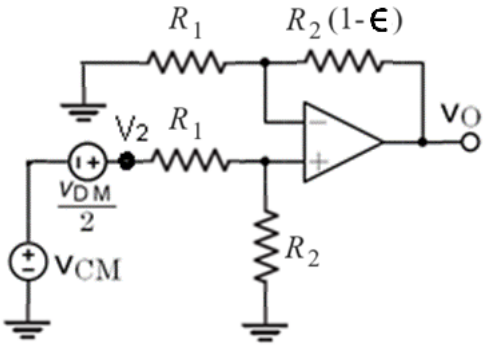

Our circuit looks like a non-inverting amplifier with a voltage divider at V_P:

$$V_{O_{V_2}} = \left(1 + \frac{R_2(1-\epsilon)}{R_1}\right) V_P$$

And

$$V_P = \left(\frac{R_2}{R_1+R_2}\right) V_2$$

Thus

$$V_{O_{V_2}} = \left[1 + \frac{R_2(1-\epsilon)}{R_1}\right]\left(\frac{R_2}{R_1+R_2}\right) V_2$$

$$= \left[1 + \frac{R_2(1-\epsilon)}{R_1}\right]\left(\frac{R_2}{R_1+R_2}\right)\left(V_{CM} + \frac{V_{DM}}{2}\right)$$

Third, due to superposition, $V_O = V_{O_{V_1}} + V_{O_{V_2}}$:

$$V_O = \left[-\frac{R_2(1-\epsilon)}{R_1}\right] V_1 + \left[1 + \frac{R_2(1-\epsilon)}{R_1}\right]\left(\frac{R_2}{R_1+R_2}\right) V_2$$

$$= \left[-\frac{R_2(1-\epsilon)}{R_1}\right]\left(V_{CM} - \frac{V_{DM}}{2}\right) + \left[1 + \frac{R_2(1-\epsilon)}{R_1}\right]\left(\frac{R_2}{R_1+R_2}\right)\left(V_{CM} + \frac{V_{DM}}{2}\right)$$

Rearrange to give $A_{DM}V_{DM}+A_{CM}V_{CM}$:

$$V_O = \left\{\left[\frac{R_2(1-\epsilon)}{R_1}\right] + \left[1 + \frac{R_2(1-\epsilon)}{R_1}\right]\left(\frac{R_2}{R_1+R_2}\right)\right\}\left(\frac{V_{DM}}{2}\right)$$

$$+ \left\{\left[1 + \frac{R_2(1-\epsilon)}{R_1}\right]\left(\frac{R_2}{R_1+R_2}\right) - \left[\frac{R_2(1-\epsilon)}{R_1}\right]\right\} V_{CM}$$

Taking out the R_2/R_1 part from the equation:

$$V_O = \frac{R_2}{R_1}\left[(1-\epsilon) + \frac{R_1 + R_2(1-\epsilon)}{R_1+R_2}\right]\left(\frac{V_{DM}}{2}\right) + \left\{\left[\frac{R_1 + R_2(1-\epsilon)}{R_1 + R_2}\right] - (1-\epsilon)\right\} V_{CM}$$

Find a common denominator:

$$V_O = \frac{R_2}{R_1}\left[\frac{(1-\epsilon)(R_1+R_2)+R_1 + R_2(1-\epsilon)}{2(R_1+R_2)}\right] V_{DM} + \left[\frac{R_1 + R_2(1-\epsilon) - (R_1 + R_2)(1-\epsilon)}{R_1 + R_2}\right] V_{CM}$$

Expand $(1-\epsilon)$ parts of the equation:

$$V_O = \frac{R_2}{R_1}\left[\frac{(R_1+R_2) - \epsilon(R_1+R_2) + (R_1 + R_2) - \epsilon R_2)}{2(R_1+R_2)}\right] V_{DM}$$

$$+ \left[\frac{R_1 + R_2 - \epsilon R_2 - (R_1 + R_2) + (R_1 + R_2)\epsilon)}{R_1 + R_2}\right] V_{CM}$$

$$= \frac{R_2}{R_1}\left[1 - \frac{\epsilon(R_1+2R_2)}{2(R_1+R_2)}\right] V_{DM} + \left\{\frac{-R_2(1-\epsilon)}{R_1} + \left[1 + \frac{R_2(1-\epsilon)}{R_1}\right]\left(\frac{R_2}{R_1 + R_2}\right)\right\} V_{CM}$$

Knowing that

$$A_{DM} = \frac{R_2}{R_1}\left[1 - \left(\frac{R_1+2R_2}{R_1+R_2}\right)\left(\frac{\epsilon}{2}\right)\right]$$

This results as:

$$V_O = A_{DM}V_{DM} + \left\{\frac{-R_2(1-\epsilon)}{R_1} + \left[1 + \frac{R_2(1-\epsilon)}{R_1}\right]\left(\frac{R_2}{R_1+R_2}\right)\right\}V_{CM}$$

Equating for common denominator

$$V_O = A_{DM}V_{DM} + \left\{\frac{-(R_1+R_2)R_2(1-\epsilon)}{R_1(R_1+R_2)} + \left[\frac{R_1R_2 + R_2R_2(1-\epsilon)}{R_1(R_1+R_2)}\right]\right\}V_{CM}$$

$$= A_{DM}V_{DM} + \left[\frac{-R_1R_2 - R_2R_2 + R_1R_2\epsilon + R_2R_2\epsilon + R_1R_2 + R_2R_2 - R_2R_2\epsilon}{R_1(R_1+R_2)}\right]V_{CM}$$

$$= A_{DM}V_{DM} + \left(\frac{R_2}{R_1+R_2}\right)\epsilon V_{CM}$$

Knowing that

$$A_{CM} = \left(\frac{R_2}{(R_1+R_2)}\right)\epsilon$$

Finally, the output voltage of the amplifier is proven to be:

$$V_O = A_{DM}V_{DM} + A_{CM}V_{CM}$$

b. For R_1 = 1 kΩ, R_2 = 2 kΩ, and ϵ = 4%, the differential and common gains of the amplifier are found to be:

$$A_{DM} = \frac{R_2}{R_1}\left[1 - \left(\frac{R_1+2R_2}{R_1+R_2}\right)\left(\frac{\epsilon}{2}\right)\right] = \frac{2\text{ k}\Omega}{1\text{ k}\Omega}\left\{1 - \left[\frac{1\text{ k}\Omega + 2(2\text{ k}\Omega)}{1\text{ k}\Omega + 2\text{ k}\Omega}\right]\left(\frac{0.04}{2}\right)\right\} = 1.933$$

$$A_{CM} = \left(\frac{R_2}{R_1+R_2}\right)\epsilon = \left(\frac{2\text{ k}\Omega}{1\text{ k}\Omega + 2\text{ k}\Omega}\right)0.04 = 0.02677$$

c. With V_2 = 10 Volt and V_1 = 5 Volt, the differential and common mode voltages of the amplifier are found to be:

$$V_{DM} = V_2 - V_1 = 10 - 5 = 5\text{ V}$$

And

$$V_{CM} = \frac{(V_2+V_1)}{2} = \frac{10+5}{2} = 7.5\text{ V}$$

From (b) we found that A_{DM} = 1.933 and A_{CM} = 0.02677

$$V_O = A_{DM}V_{DM} + A_{CM}V_{CM} = (1.933)(5) + (0.02677)(7.5) = 9.866\text{ V}$$

As a result, the output voltage of the amplifier is found to be equal to 9.866 Volt.

d. It seems that the differential mode, rather than the common mode, determines most of the output voltage of the difference amplifier.

$$A_{DM}V_{DM} = \left(\frac{1.933 \times 5}{9.866}\right) \times 100\ \% = 97.96\ \%$$

And

$$A_{CM}V_{CM} = \left(\frac{0.02677 \times 7.5}{9.866}\right) \times 100\ \% = 2.04\ \%$$

5. Given a non-ideal difference amplifier below:

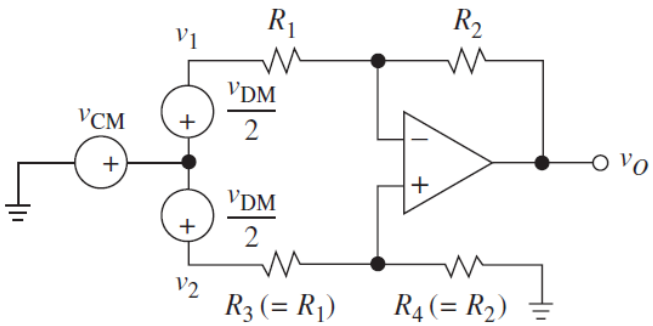

a. Derive equation for obtaining common mode rejection ratio for a non-ideal difference amplifier. [12 marks]

b. If for the non-ideal difference amplifier circuit given above, R_1 is 10 kΩ and R_2 is 20 kΩ, and $\epsilon = 2\%$ find the CMRR of the circuit. [4 marks]

c. Comment on the result that you obtained in part (b). [4 marks]

Solution

a. We have seen before from previous question that common mode gain of non-ideal difference amplifier is given as:

$$A_{CM} = \left(\frac{R_2}{R_1 + R_2}\right)\epsilon$$

And the differential mode gain is given by:

$$A_{DM} = \frac{R_2}{R_1}\left[1 - \left(\frac{R_1 + 2R_2}{R_1 + R_2}\right)\left(\frac{\epsilon}{2}\right)\right]$$

This will give common mode rejection ratio (CMRR) of the amplifier as:

$$\text{CMRR} = 20 \log \left|\frac{A_{DM}}{A_{CM}}\right|$$

Expanding the equation:

$$\frac{A_{DM}}{A_{CM}} = \frac{\frac{R_2}{R_1}\left[1 - \left(\frac{R_1 + 2R_2}{R_1 + R_2}\right)\left(\frac{\epsilon}{2}\right)\right]}{\left(\frac{R_2}{R_1 + R_2}\right)\varepsilon}$$

$$= \left(\frac{R_1 + R_2}{R_1 \epsilon}\right)\left[1 - \left(\frac{R_1 + 2R_2}{R_1 + R_2}\right)\left(\frac{\epsilon}{2}\right)\right]$$

Since $\epsilon \ll 1$, then

$$\frac{A_{DM}}{A_{CM}} = \left(\frac{R_1 + R_2}{R_1 \epsilon}\right)(1 - 0)$$

By combining the equations given above, CMRR for the above amplifier is:

$$\text{CMRR} = 20 \log \left[\frac{\left(1 + \frac{R_2}{R_1}\right)}{\epsilon}\right]$$

b. If R_1 is 10 kΩ, R_2 is 20 kΩ and $\epsilon = 2\%$, then by using the equation in (a), the CMRR of the circuit is found to be:

$$\text{CMRR} = 20 \log \left[\frac{\left(1 + \frac{R_2}{R_1}\right)}{\epsilon}\right] = 20 \log \left[\frac{\left(1 + \frac{20\ \text{k}\Omega}{10\ \text{k}\Omega}\right)}{0.02}\right] = 43.52\ \text{dB}$$

c. The value of common mode rejection increases as resistor mismatch is smaller. This means that more precise resistor tolerance enhancing the ability of the op amp to cancel out the common mode noises from the output.

6. For the given instrumentation amplifier given in the figure below, perform the following tasks.

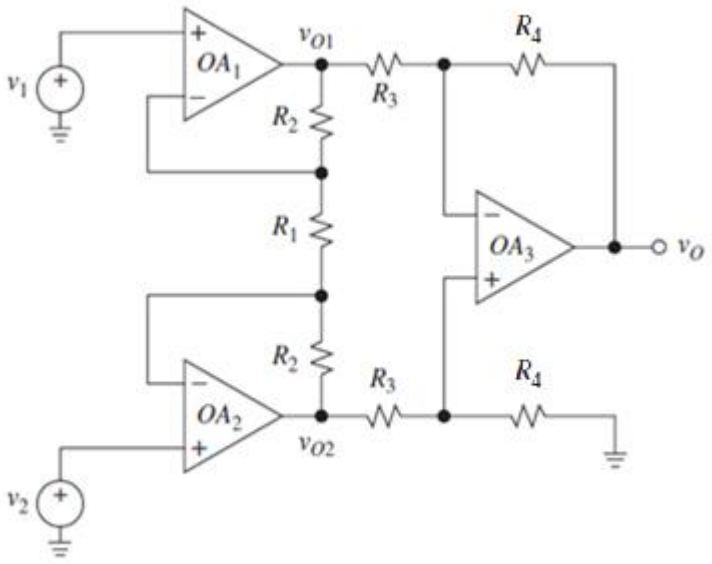

a. Describe the main limitation of difference amplifier. Explain how instrumentation amplifier improves the design of difference amplifier. [4 marks]

b. Derive the equation for determining the output voltage of the instrumentation amplifier circuit as shown in the figure given above. [12 marks]

c. For the given instrumentation amplifier circuit, determine the range required for resistor R_1, to realize a differential gain adjustable from 5 to 500. Assume that $R_4 = 2R_3$, so that the difference amplifier gain is 2. [12 marks]

Solution

a. It is difficult to obtain a high input impedance and a high gain in a difference amplifier with reasonable resistor values. One solution is to insert a voltage follower between each source and the corresponding input.

However, a disadvantage of this design is that the gain of the amplifier cannot easily be changed. We would need to change two resistance values and still maintain equal ratios between R_2/R_1 and R_4/R_3. Optimally, we would like to be able to change the gain by changing only a single resistance value.

The instrumentation amplifier circuit as shown in the figure above allows this gain adjustment flexibility. Note that two noninverting amplifiers, OA_1 and OA_2, are used as the input stage, and a difference amplifier, OA_3 is the second, or amplifying, stage.

b. We begin the analysis of the derivation equation for the instrumentation amplifier circuit using the virtual short concept. The voltages at the inverting terminals of the voltage followers are equal to the input voltages. The currents and voltages in the amplifier are shown in the figure given below.

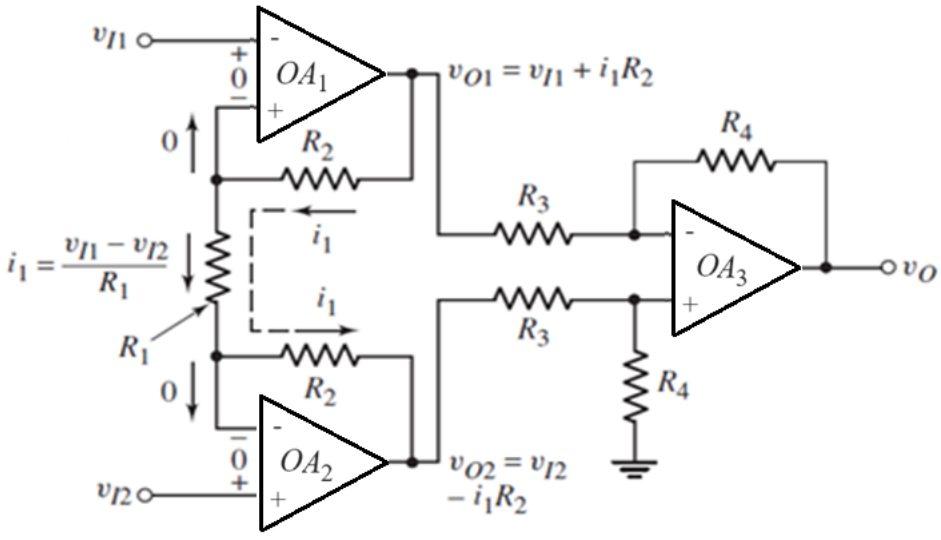

The current in resistor R_1 is then

$$i_1 = \frac{v_{I1} - v_{I2}}{R_1}$$

The current in resistors R_2 is also i_1, as shown in the figure, and the output voltages of op-amps OA_1 and OA_2 are, respectively:

$$v_{O1} = v_{I1} + i_1 R_2 = \left(1 + \frac{R_2}{R_1}\right) v_{I1} - \left(\frac{R_2}{R_1}\right) v_{I2} \qquad (Eq.1)$$

And

$$v_{O2} = v_{I2} - i_1 R_2 = \left(1 + \frac{R_2}{R_1}\right) v_{I2} - \left(\frac{R_2}{R_1}\right) v_{I1} \qquad (Eq.2)$$

From previous results, the output of the difference amplifier is given as

$$v_O = \frac{R_4}{R_3}(v_{O2} - v_{O1}) \qquad (Eq.3)$$

Substituting equations (1) and (2) into equation (3), we find the output voltage, as follows:

$$v_O = \left(\frac{R_4}{R_3}\right)\left(1 + \frac{2R_2}{R_1}\right)(v_{I2} - v_{I1}) \qquad (Eq.4)$$

Since the input signal voltages are applied directly to the noninverting terminals of OA_1 and OA_2, the input impedance is very large, ideally infinite, which is one desirable characteristic of the instrumentation amplifier.

Also, the differential gain is a function of resistor R_1, which can easily be varied by using a potentiometer, thus providing a variable amplifier gain with the adjustment of only one resistance.

c. For the given instrumentation amplifier circuit, assume that resistance R_1 is a combination of a fixed resistance R_{1f} and a variable resistance R_{1v}, as shown in the figure below.

The fixed resistance ensures that the gain is limited to a maximum value, even if the variable resistance is set equal to zero. Assume the variable resistance is a 100 kΩ potentiometer.

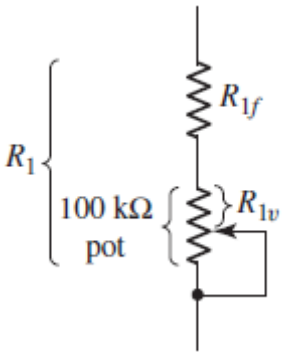

From equation (4) in part (b), the maximum differential gain is:

$$500 = 2\left(1 + \frac{2R_2}{R_{1f}}\right)$$

The minimum differential gain is:

$$5 = 2\left(1 + \frac{2R_2}{R_{1f} + 100\text{k}\Omega}\right)$$

From the maximum gain expression, we find that:

$$2R_2 = 249R_{1f}$$

Substituting this R_2 value into the minimum gain expression, we have:

$$1.5 = \frac{2R_2}{R_{1f} + 100\text{k}\Omega} = \frac{249R_{1f}}{R_{1f} + 100\text{k}\Omega}$$

The resulting value of R_{1f} is 0.606 kΩ, which yields R_2 = 75.5 kΩ.

B. Operational Amplifier Internals

7. Consider a simple bipolar op-amp circuit shown in the figure below, describe the stages that make up its internal circuit. [6 marks]

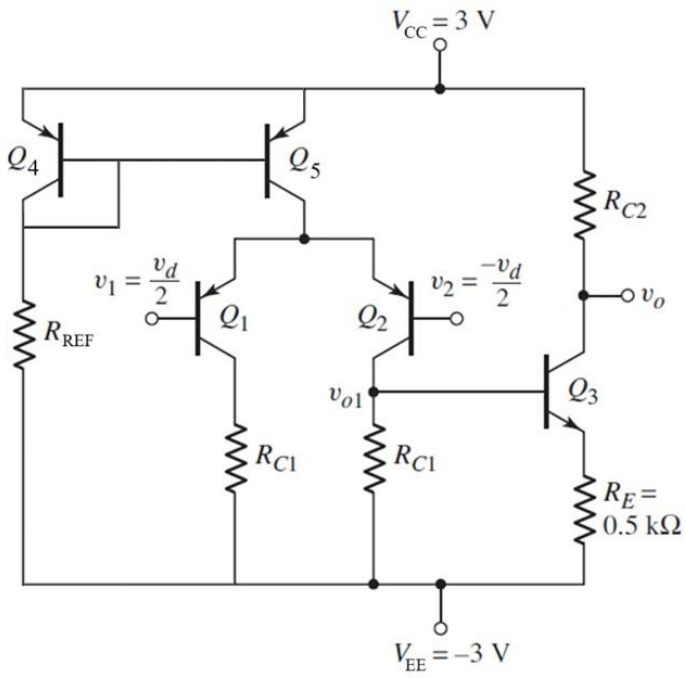

Solution

Current mirror source. Transistors Q_4 and Q_5. Provide DC biasing currents.

Common emitter stage. Transistor Q_1 and Q_2. Act as input of the op amp.

Single stage common emitter amplifier stage. Transistor Q_3. Provide gain of the op amp.

8. For a basic unipolar operational amplifier circuit as shown in the figure below, describe the stages that make up the internal circuit. [8 marks]

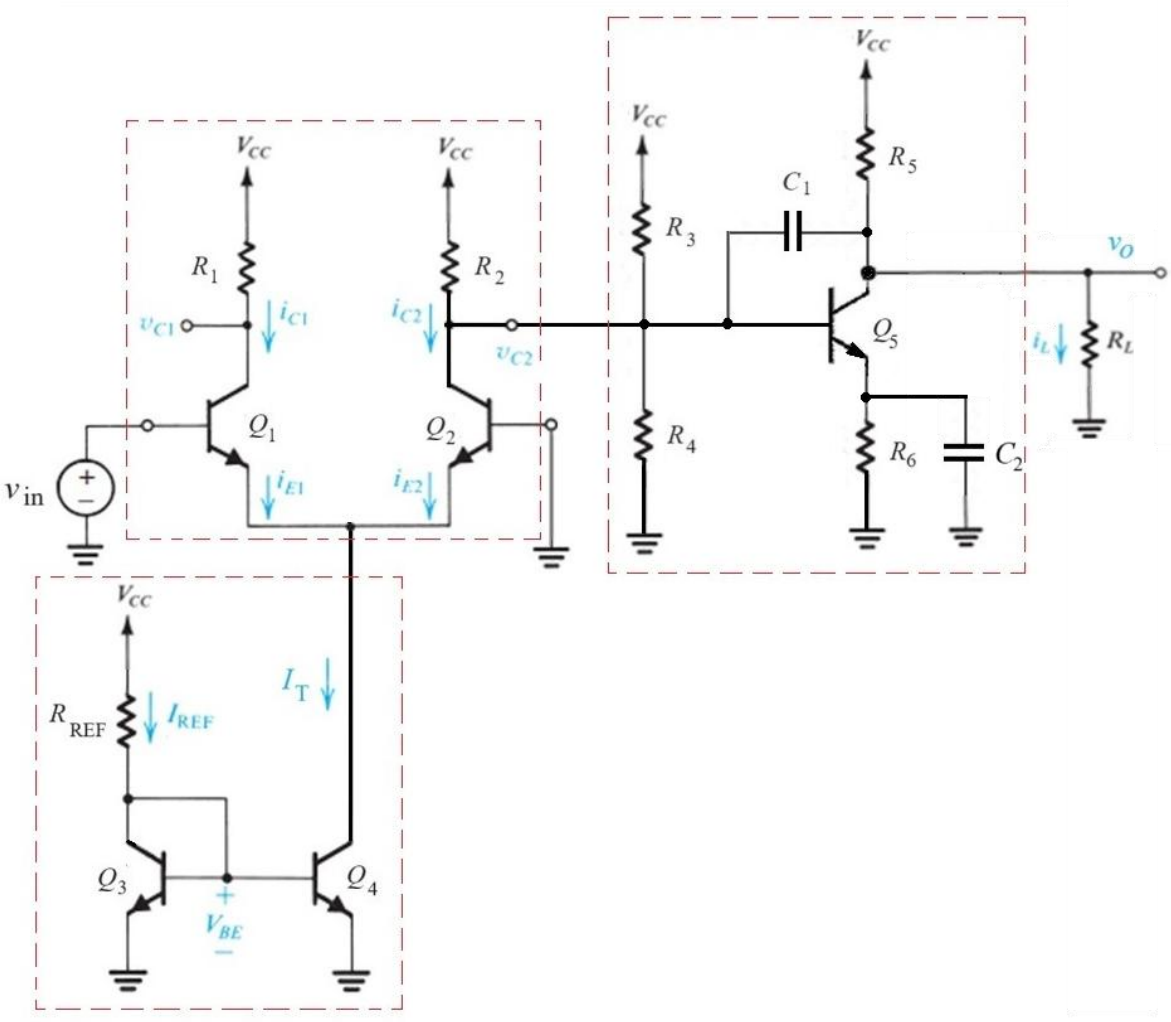

Solution

- Differential input amplifier stage: Transistors Q_1 and Q_2, resistors R_1 and R_2. The differential amplifier is a type of transistor based amplifier that amplifies the difference between two input voltages (i.e. these are V_{in} at Q_1 and GND at Q_2) at the outputs (i.e. V_{C1} and V_{C2} respectively), but suppresses any voltage common to the two inputs.
- Current source stage: Transistors Q_3 and Q_4 and resistor R_{REF}. Current source is included in the op amp circuit to supply biasing current to the part(s) of the circuit that need it.
- Common emitter amplifier stage: Transistor Q_5, biasing resistors R_3 and R_4, resistors R_5 and R_6, and compensating capacitor C_1. The gain stage is common emitter BJT amplifier with potential divider biasing circuit. In this stage, the output voltage at the collector of Q_2 differential input amplifier stage is directly coupled to the base of the Q_5.
- Also shown in the figure are the input voltage source v_{in} and load resistor R_L at the output.

9. For a uA741 operational amplifier, the components that make up its internal structure provide its functionality and feature.

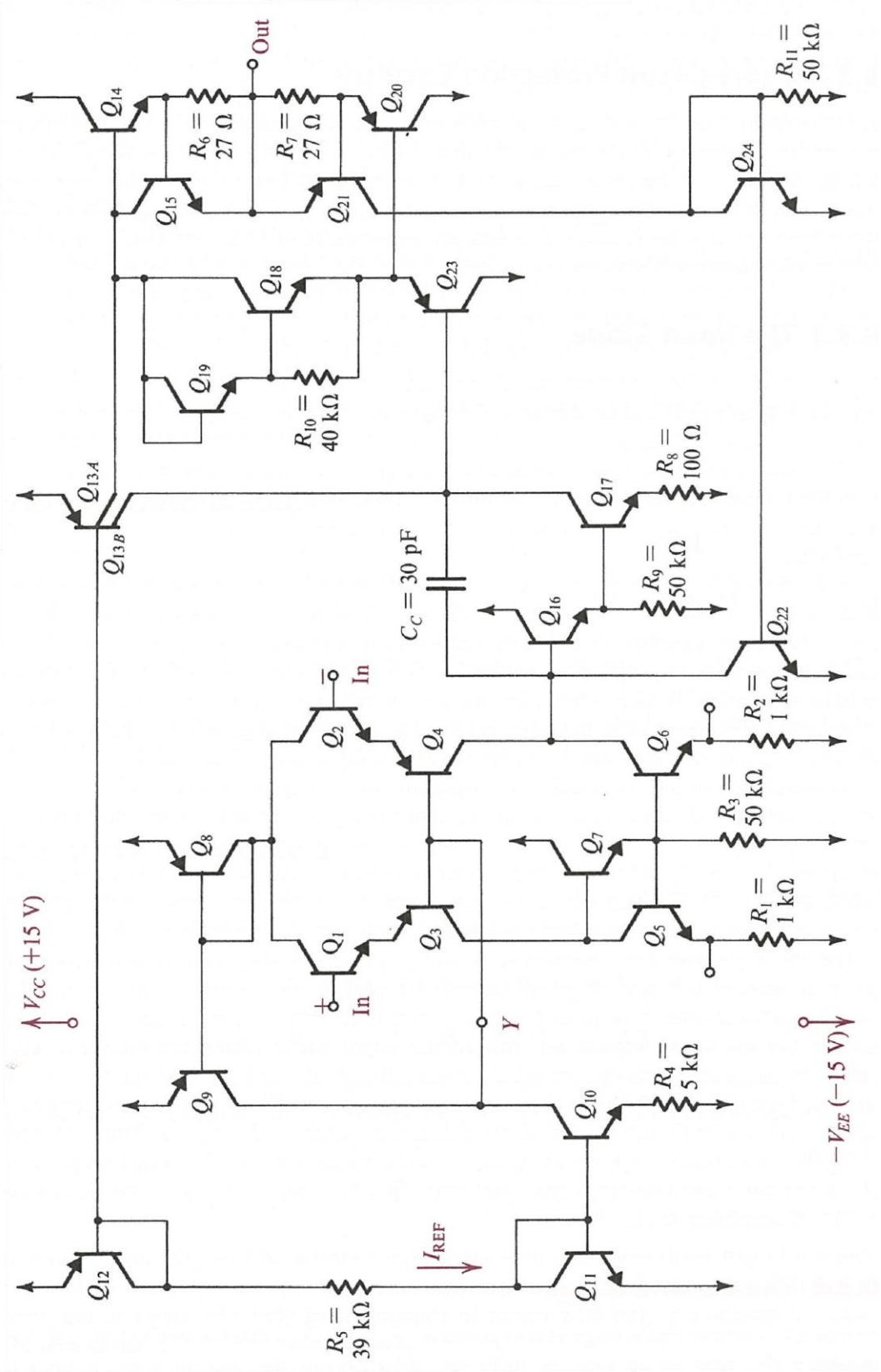

a. Outline the main stages inside the op amp. [6 marks]

b. Describe the characteristics of the op amp based on its internal structures. [8 marks]

Solution

a. The main stages inside the uA741 op amp are as outlined in the figure below.

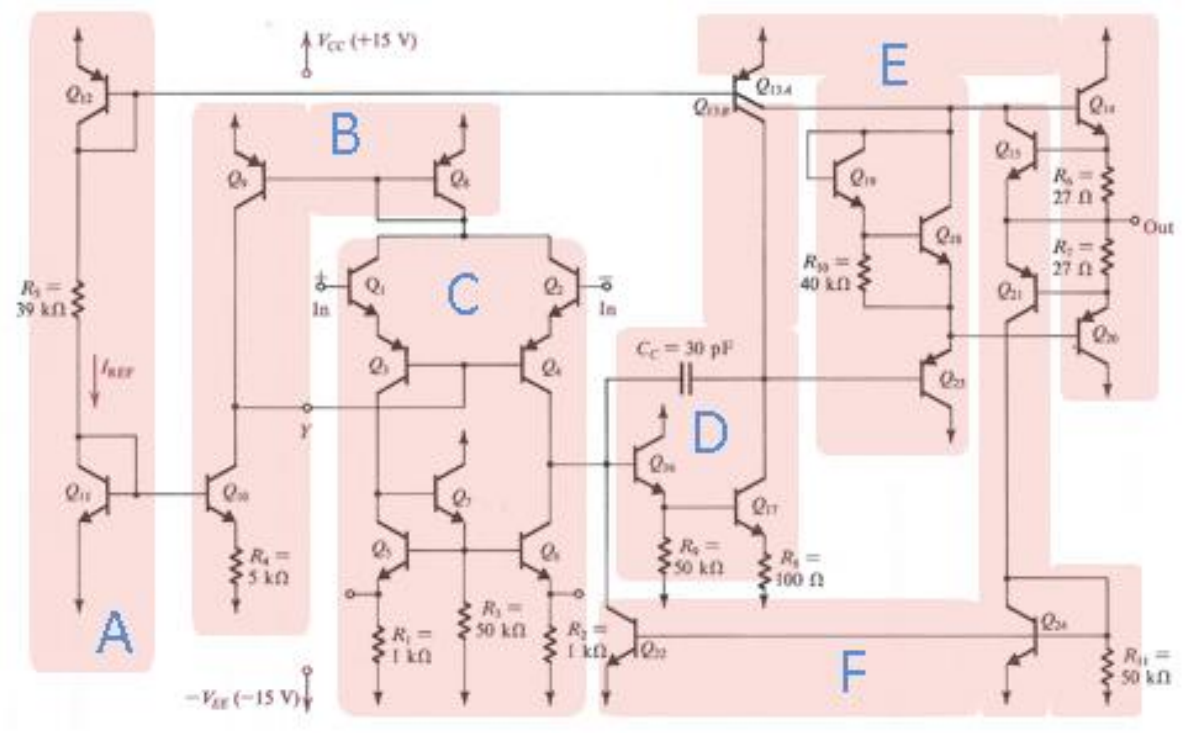

Section description:

- Section A is referencing current bias – Reliable reference current at working condition and set up.
- Section B is input stage bias – Current mirror for precise biasing.
- Section C is input stage – Differential inputs.
- Section D is first output stage – Cascaded amplifier.
- Section E is second output stage – Class AB amplifier.
- Section F is short circuit protection – Prevent short circuit at the output.

b. Internal characteristics that contribute to the overall characteristics and functionality of the op-amp:

- Input Stage - Input stage of the op amp consists of a differential-input amplifier circuit (with inputs of V_n and V_p). The output of the amplifier circuit is single ended out (V_o). This results in a moderate gain coming from this stage. Key design feature of the input stage of the op amp is to minimise input mismatch.

  The high input impedance (Z_{in}) of the op amp is due to the input impedance of the differential-input amplifier.

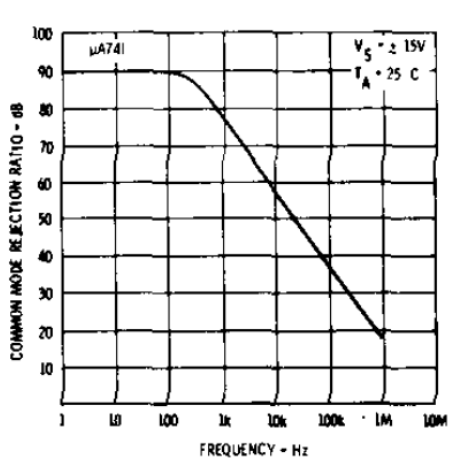

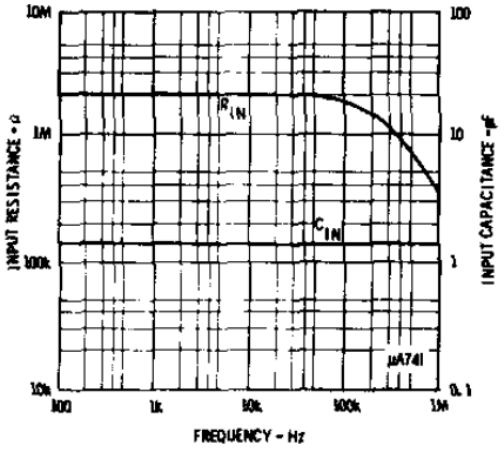

- Gain Stage - The gain stage of the op amp consists of 'simple' stage (e.g. in most general-purpose op amp design, it is often only made up from one transistor). With this stage the op amp can afford to acquire a high open-loop gain.

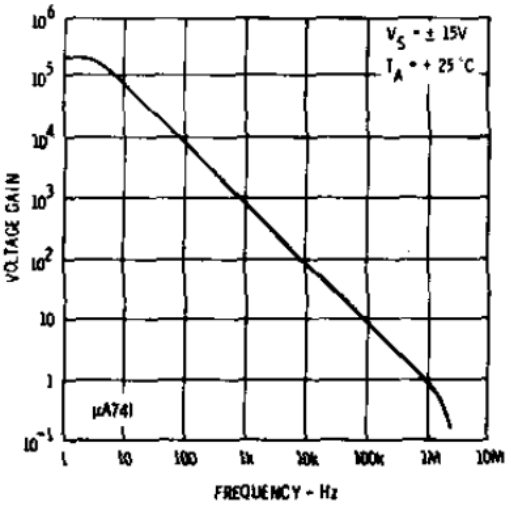

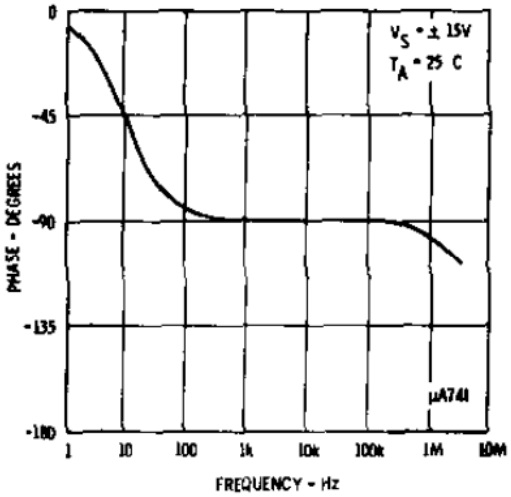

For stability in the gain stage of op amp, we need gain to roll-off at low frequency (1 Hz) – open loop. In this stage, the Miller capacitance (C_m) and input resistance of the op amp (R_{in}) form low-pass filter reducing the available open loop bandwidth of the op amp.

- Miller Capacitance - The Miller effect in op amp is an increase in the equivalent input capacitance of an inverting voltage amplifier. This is due to amplification of the effect of capacitance between the input and output terminals. The cut-off frequency of this is given as:

$$f_o = \frac{1}{2\pi R_{in} C_m}$$

As a result, we need to implement a large, internal C to compensate for this effect inside the op amp. The parasitic capacitance and compensating capacitor influence the transient and pulse responses of the op amp.

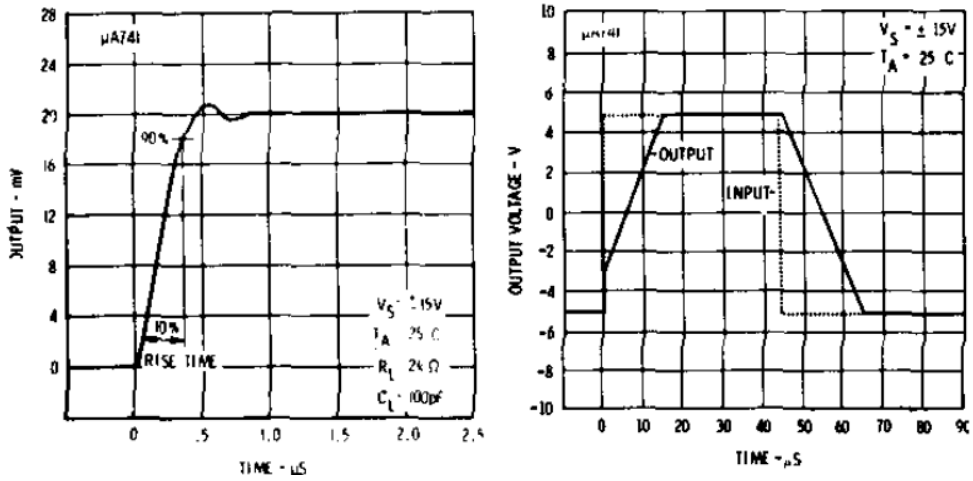

- Output Stage - The output stage of the op amp is made up a Class AB amplifier (+ buffer circuit).

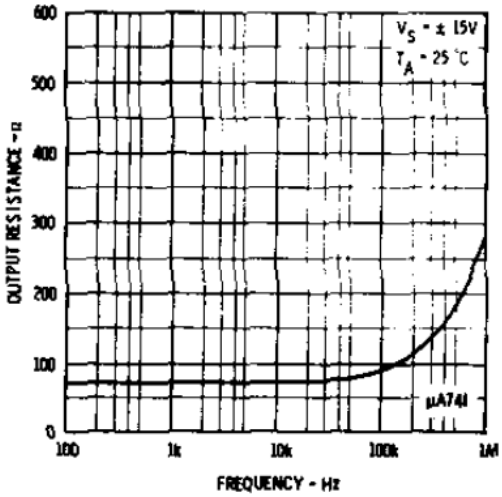

With this design feature, its key design features are a circuit that provides low output impedance (Z_{out}) and supply high current. Thus, the output of the amplifier is practically isolated from the input with this Class AB arrangement. Furthermore, the output stage is also supplemented with short-circuit circuitry for protection.