XMUT303 Analogue Electronics

Tutorial 1: Operational Amplifier

A. Operational Amplifiers

1. Given below is an example of generalised op amp based voltage amplifier. Note that the output port of the amplifier is modelled with a voltage-controlled voltage source.

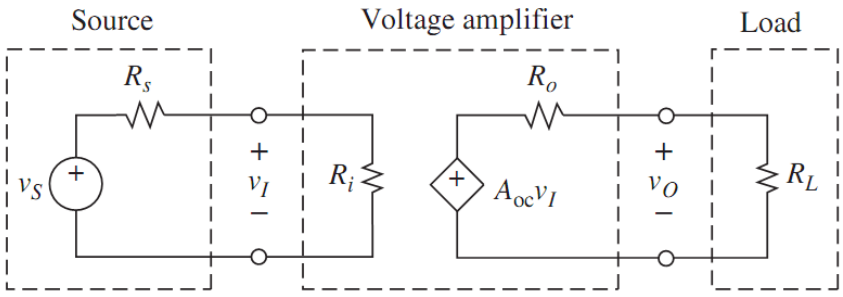

   a. Derive an expression of v_o (output voltage) in term of v_s (input/source voltage) for the amplifier given above. [6 marks]

   b. The amplifier above has R_i = 100 kΩ, A_{oc} = 100 V/V, and R_o = 1 Ω and is driven by a source with R_s = 25 kΩ and drives a load R_L = 3 Ω. Calculate the overall gain as well as the amount of input and output loading. [4 marks]

   c. Repeat, but for a source with R_s = 50 kΩ and a load R_L = 4 Ω. [4 marks]

   d. Compare result of (b) with (c) and comment on the comparison. What influence do impedances at the input and output of the op amp have on the amplifier? [4 marks]

2. Unlike the ideal op amp that has an infinite open loop gain (a), a practical op amp has a finite open loop gain. Given in the figures shown below (a) a non-inverting amplifier and (b) a circuit model for its analysis.

   a. Derive an expression for v_o for the amplifier given below that take into account the influence of finite open loop gain (a). [12 marks]

   b. Let v_i = 1 V, R_1 = 2 kΩ, and R_2 = 18 kΩ. Find v_o if:

      i. a = 10^2 V/V. [4 marks]

ii. a = 10^4 V/V. [4 marks]

iii. a = 10^6 V/V. [4 marks]

c. Comment on your findings. How does the finite gain of the op amp affect the amplifier circuit? [4 marks]

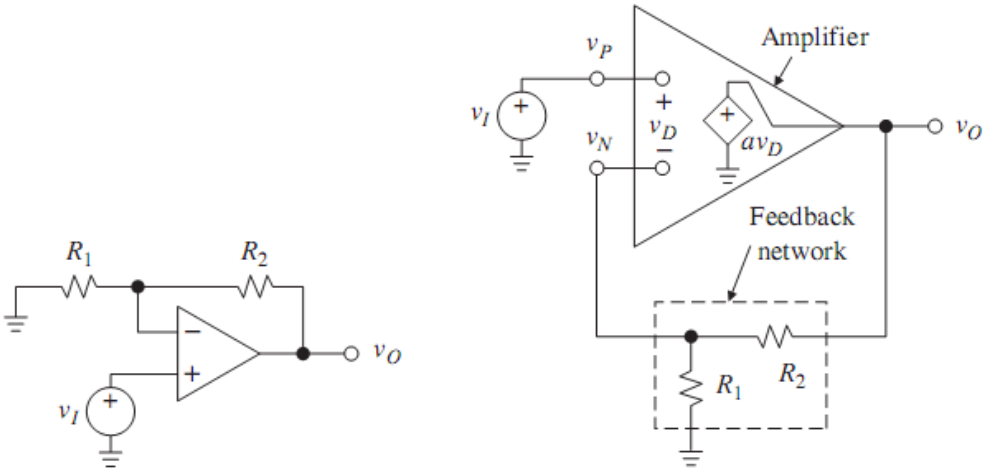

(a) (b)

3. Given below is a difference amplifier circuit connected with voltage sources v_1 and v_2 at the inverting pin and non-inverting pin of the op amp respectively.

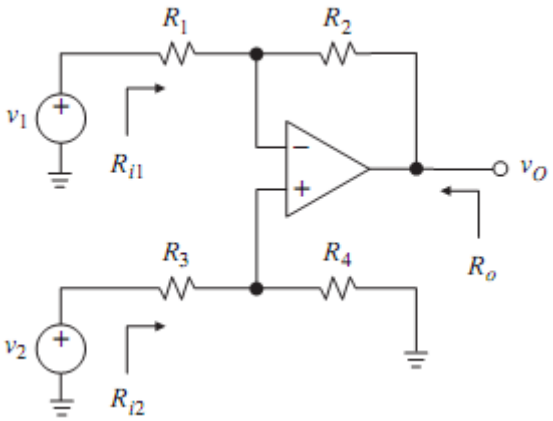

a. Prove that the output voltage of difference amplifier is given by: [20 marks]

$$v_o = \frac{R_2}{R_1}\left[\left(\frac{1 + R_1/R_2}{1 + R_3/R_4}\right)v_2 - v_1\right]$$

And

$$R_{i1} = R_1 \qquad R_{i2} = R_3 + R_4 \qquad R_0 = 0$$

b. Design a difference amplifier circuit such that $v_o = v_2 - 3v_1$ and $R_{i1} = R_{i2} = 100$ kΩ. [24 marks]

4. You are given in the figure below a non-ideal difference amplifier:

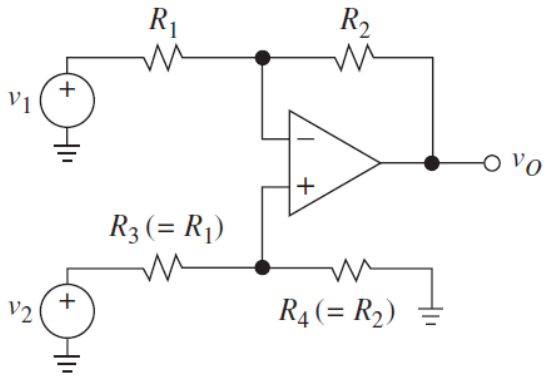

a. Prove that differential and common-mode gains of the difference amplifier with non-ideal components are given as follows: [60 marks]

$$V_O = A_{DM}V_{DM} + A_{CM}V_{CM}$$

Where:

$$A_{DM} = \frac{R_2}{R_1}\left[1 - \left(\frac{R_1+2R_2}{R_1+R_2}\right)\left(\frac{\in}{2}\right)\right] \qquad V_{DM} = V_2 - V_1$$

$$A_{CM} = \left(\frac{R_2}{(R_1+R_2)}\right)\in \qquad V_{CM} = \frac{(V_2+V_1)}{2}$$

b. If R_1 = 1 kΩ, R_2 = 2 kΩ, V_2 = 10 Volt, V_1 = 5 Volt and ϵ = 4% resistor value mismatch, find the differential mode and common mode gain of the amplifier. [4 marks]

c. Determine the output voltage of the amplifier from (b). [6 marks]

d. Comment on the result of (c). [4 marks]

5. Given a non-ideal difference amplifier below:

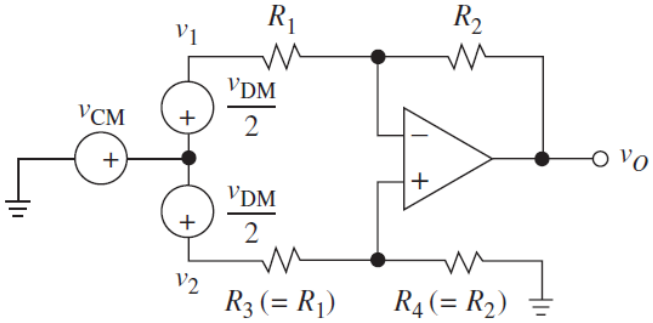

a. Derive equation for obtaining common mode rejection ratio for a non-ideal difference amplifier. [12 marks]

b. If for the non-ideal difference amplifier circuit given above, R_1 is 10 kΩ and R_2 is 20 kΩ, and $\epsilon = 2\%$ find the CMRR of the circuit. [4 marks]

c. Comment on the result that you obtained in part (b). [4 marks]

6. For the given instrumentation amplifier given in the figure below, perform the following tasks.

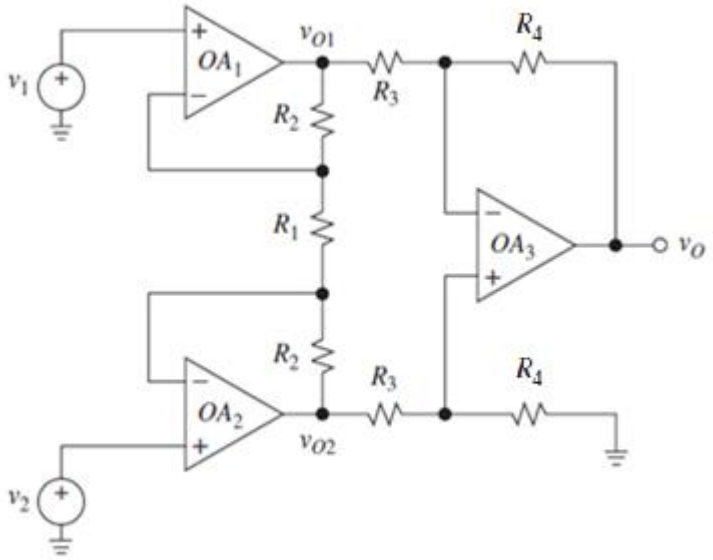

a. Describe the main limitation of difference amplifier. Explain how instrumentation amplifier improves the design of difference amplifier. [4 marks]

b. Derive the equation for determining output voltage of the instrumentation amplifier circuit as shown in the figure given above. [4 marks]

c. For the given instrumentation amplifier circuit, determine the range required for resistor R_1, to realize a differential gain adjustable from 5 to 500. Assume that $R_4 = 2R_3$, so that the difference amplifier gain is 2. [12 marks]

B. Operational Amplifier Internals

7. Consider a simple bipolar op-amp circuit shown in the figure below describe the stages that make up its internal circuit. [6 marks]

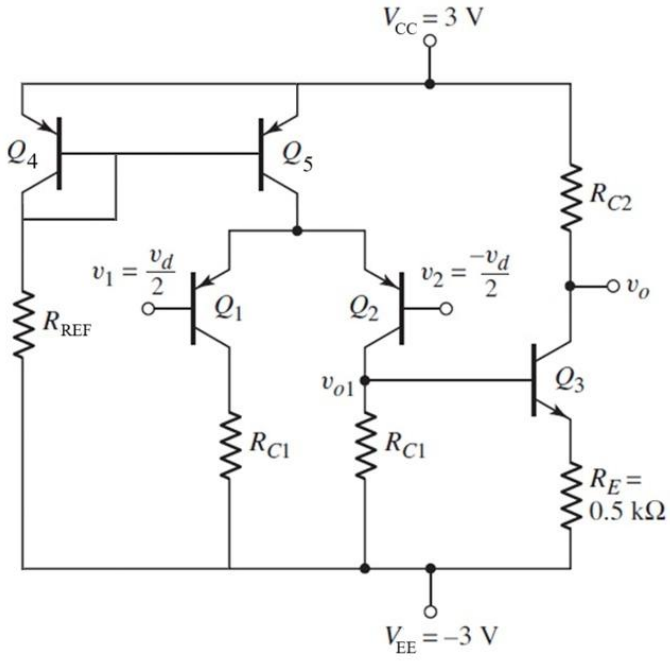

8. For a basic unipolar operational amplifier circuit as shown in the figure below, describe the stages that make up the internal circuit. [8 marks]

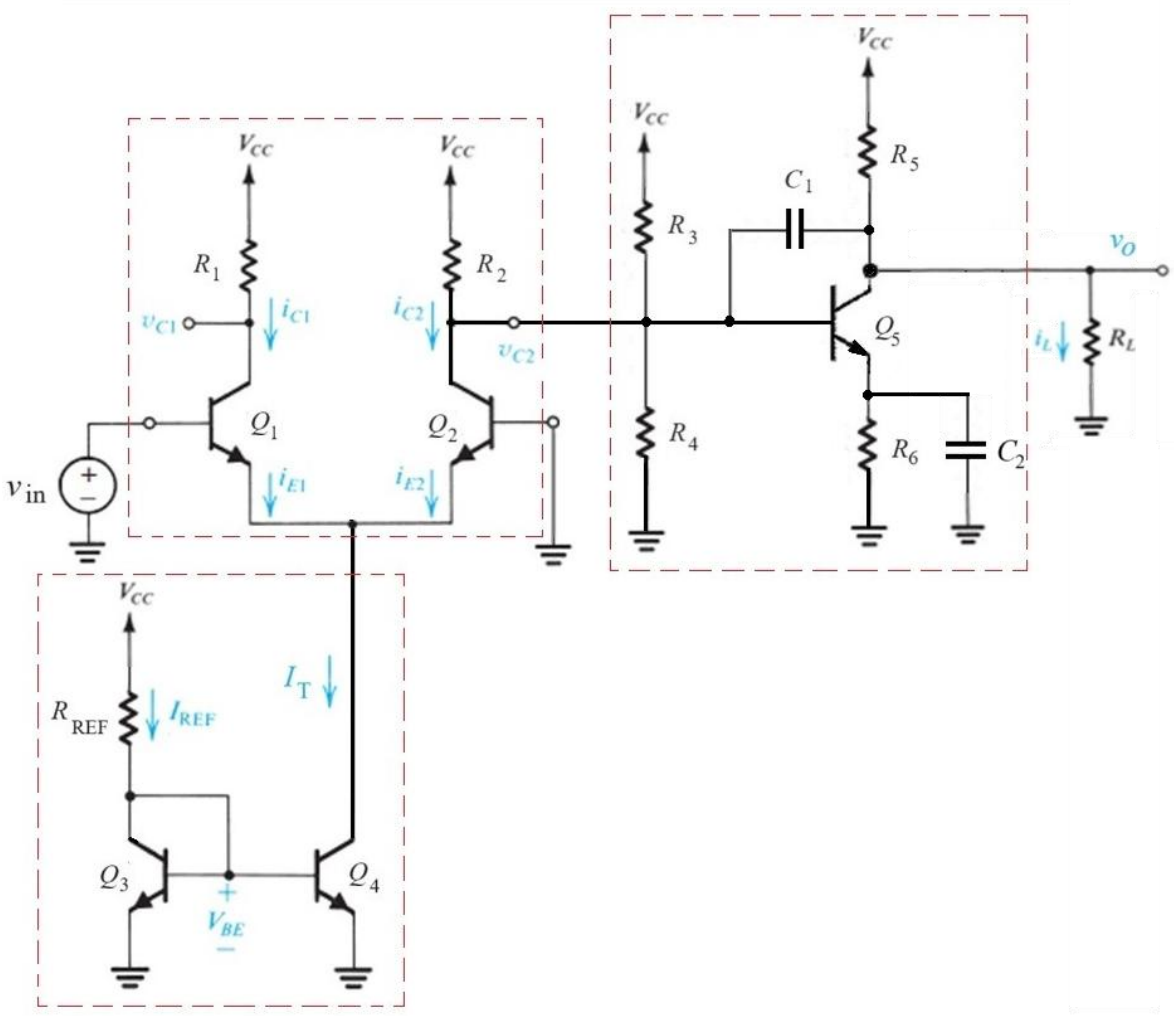

9. For a uA741 operational amplifier, the components that make up its internal structure provide its functionality and feature.

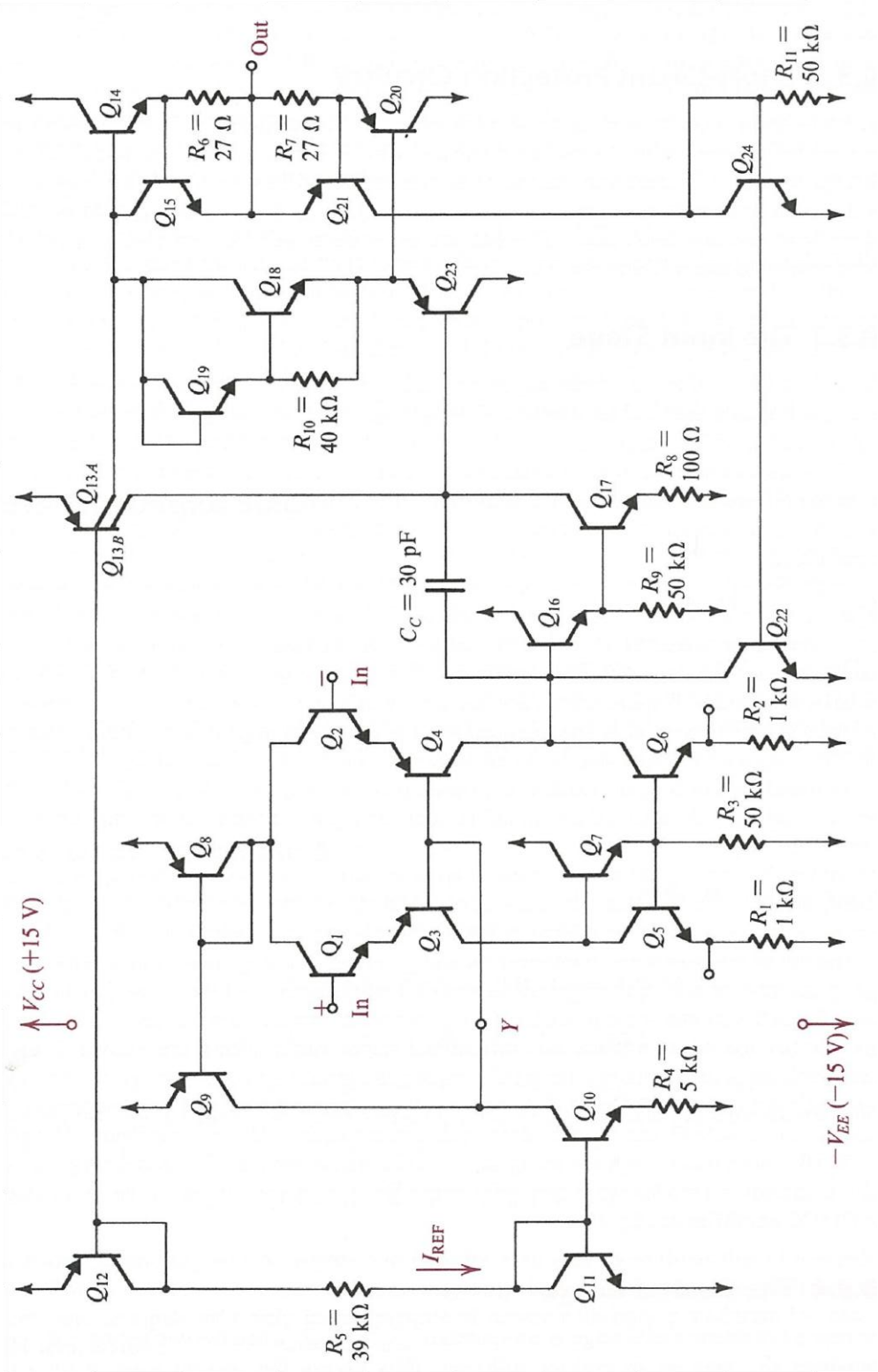

a. Outline the main stages inside the op amp. [6 marks]

b. Describe the characteristics of the op amp based on its internal structures. [8 marks]