XMUT303 Analogue Electronics

Tutorial 2: Op Amp Design and Analysis (Solution)

A. Offset Voltage and Bias Current of Op Amp

1. The input offset voltage is a common DC parameter in the operational amplifier (op amp) design specifications.

   a. State definition of the offset voltage of op amp. [4 marks]

   b. Describe why this offset voltage is an issue in the op amp circuit. [4 marks]

   c. Determine the equation that measure the offset voltage (V_{OS}) in the following non-inverting amplifier circuit. [6 marks]

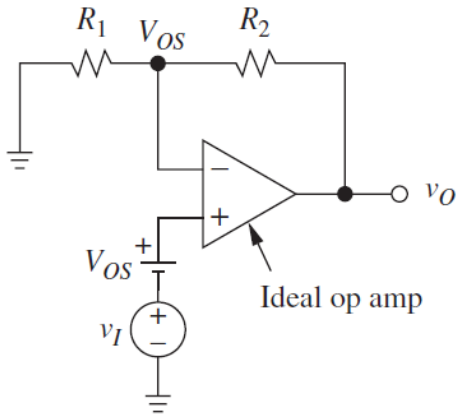

   d. If R_1 = 10 kΩ and R_2 = 100 kΩ, when a 1 μV voltage source v_I is applied in the input, the output voltage, v_O is 0.1 mV. What is the offset voltage of the op amp? [2 marks]

Solution

a. In the case of the ideal op-amp, the DC voltage of the $V_{IN(+)}$ and $V_{IN(-)}$ terminals match exactly when the input voltage (V_i) is 0 V.

   In practice, however, there are differences in input impedance and input bias current between the $V_{IN(+)}$ and $V_{IN(-)}$ terminals, causing a slight difference in their voltages.

This difference called input offset voltage is multiplied by a gain, appearing as an output voltage deviation from the ideal value.

b. When used in amplifiers of sensors, etc., the input offset voltage of an op-amp results in an error of sensor detection sensitivity. To keep sensing errors below a specified tolerance level, it is necessary to select an op-amp with low input offset voltage.

c. For an ideal non-inverting amplifier, the output voltage of the amplifier is given as:

$$V_O = \left(1 + \frac{R_2}{R_1}\right) V_I$$

Including the offset voltage (V_{OS}) into the equation for practical op amp circuit, the equation of the non-inverting amplifier becomes:

$$V_O = \left(1 + \frac{R_2}{R_1}\right)(V_I + V_{OS})$$

Rearranging the equation given above, the offset voltage of the non-inverting amplifier circuit is:

$$V_{OS} = \left(\frac{R_1}{R_1 + R_2}\right) V_O - V_I$$

d. Entering the values into the equation derived in part (c), the offset voltage of the op amp is:

$$V_{OS} = \left(\frac{R_1}{R_1 + R_2}\right) V_O - V_I$$

$$= \left(\frac{10\text{k}}{10\text{k} + 100\text{k}}\right) 0.1\ \text{mV} - 1\ \mu\text{V} = 8.1\ \mu\text{V}$$

2. Ideally, no current flows into the input terminals of an op amp. In practice, there are always two input bias currents exist in the op amp inputs e.g. non-inverting and inverting bias currents.

   a. Describe how bias current creates problem in application of op amp. [4 marks]

   b. For an inverting amplifier given below, prove that the bias currents of the op amp's contribution to the output voltage is: [8 marks]

$$V_O = -\left(\frac{R_2}{R_1}\right) R_p I_p + R_2 I_N$$

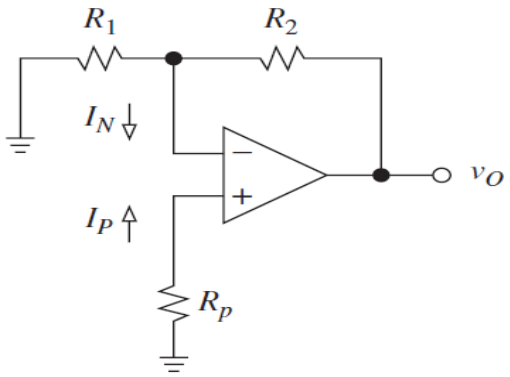

c. If R_1 = 1 kΩ, R_2 = 4.7 kΩ, and R_p = 2.2 kΩ in the inverting amplifier circuit given in part (b), determine the error in the output voltage if the bias current for the input of the op amp, I_B is 80 nA. [2 marks]

Solution

a. Bias current is a problem for the op amp user because it flows in external impedances and produces voltages, which add to system errors. Consider a non-inverting unity gain buffer driven from a source impedance of 1 MΩ. If the bias current is 10 nA, it will introduce an additional 10 mV of error. This degree of error is not trivial in any system.

b. The proof on the equation began with the claim that:

$$V_O = -\left(\frac{R_2}{R_1}\right) R_p I_p + R_2 I_N$$

There are (at least) a couple of ways to prove this equation.

- Superposition – Consider each of the current sources in turn and sum their contributions to the output.
- Detailed analysis.

Non-Inverting Part:

Assume that $I_N = 0$ and calculate the output error caused by the presence of non-zero.

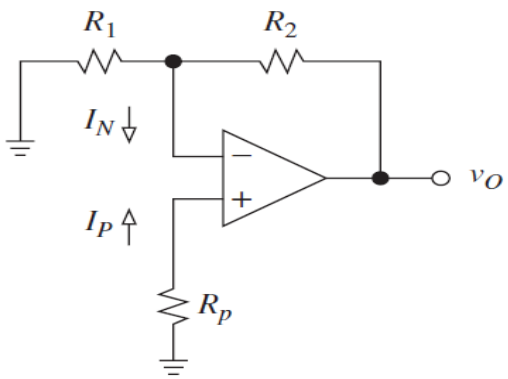

When the bias current flows through R_p it generates a voltage V_p $(= R_p I_p)$. This voltage is then amplified by the standard gain of an inverting amplifier.

$$v_{O1} = -\left(\frac{R_2}{R_1}\right) V_p = -\left(\frac{R_2}{R_1}\right) R_p I_p$$

Inverting Part:

Now assume that $I_P = 0$ and calculate the output error caused by the presence of non-zero.

As there is no current flowing in the non-inverting side of the op- amp, there is no voltage at the non-inverting terminal ($V_P = 0$). Because of the virtual short this implies that $V_N = 0$ also.

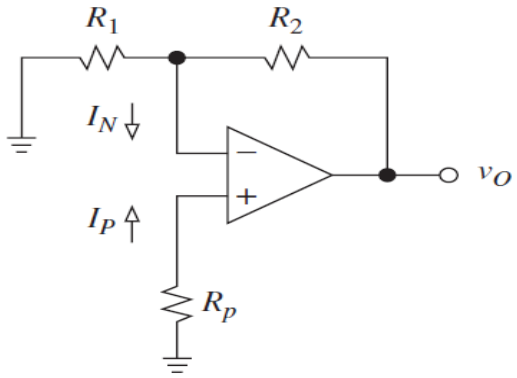

As there is no voltage across R_1, there is consequently no current flowing through it. The entirety of I_N must therefore flow through R_2.

As a current I_N flows from the output to the non-inverting terminal, the output must therefore be $R_2 I_N$ higher than V_N.

$$V_{O2} = R_2 I_N$$

Overall:

Summing the two contributions we obtain the expression given on the page

$$V_O = V_{O1} + V_{O2} = -\left(\frac{R_2}{R_1}\right) R_p I_p + R_2 I_N$$

c. Entering the values into the equation and assume that $I_P = I_N = I_B = 80$ nA, the error in the output voltage of the amplifier circuit is:

$$V_O = -\left(\frac{R_2}{R_1}\right) R_p I_p + R_2 I_N$$

$$= -\left(\frac{4.7\text{k}}{1\text{k}}\right)(2.2\text{k})(80 \times 10^{-9}) + (4.7\text{k})(80 \times 10^{-9}) = 0.4512 \text{ mV}$$

3. For eliminating the errors due to bias current, most modern precision bipolar input stage-based op amplifiers use some means of internal bias current compensation.

a. For a given non-inverting amplifier, prove that the bias currents of the op amp's contribution to the output voltage is: [16 marks]

$$V_o = \left(1 + \frac{R_2}{R_1}\right) R_p I_p + R_2 I_N$$

b. Describe how the testing circuit given below is used to measure the bias current on the given operational amplifier. [12 marks]

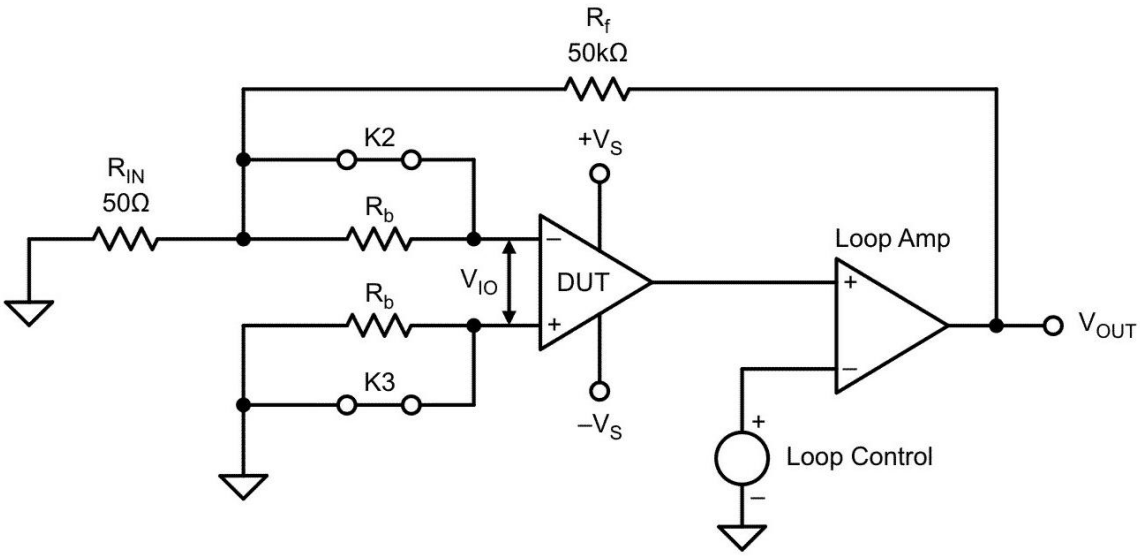

Solution

a. The current flowing through R_p generates a voltage.

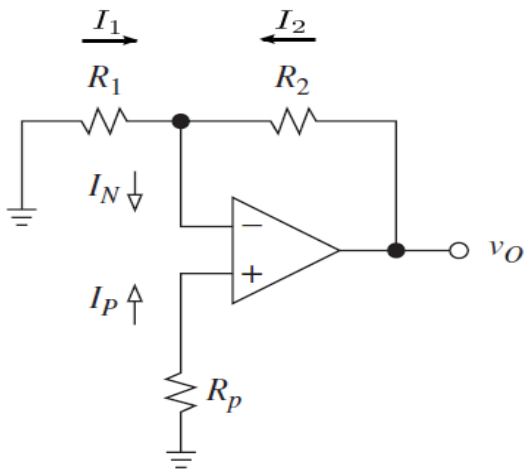

The convention of current flow we have adopted means that V_P must be less than zero.

$$V_p = -R_P I_P \qquad (1)$$

And also for ideal op amp:

$$V_N = V_p \qquad (2)$$

Because of the virtual short between the terminals of the op-amp, $V_N = R_p I_p$ also, now.

$$I_1 = -\frac{V_N}{R_1} = -\left(\frac{R_P}{R_1}\right) I_P \qquad (3)$$

Then $I_N = I_2 + I_1$ as a result:

$$I_2 = I_N - I_1 \qquad (4)$$

Assigning (3) into (4) will yield:

$$I_2 = I_N - I_1 = I_N + \left(\frac{R_p}{R_1}\right) I_p \qquad (5)$$

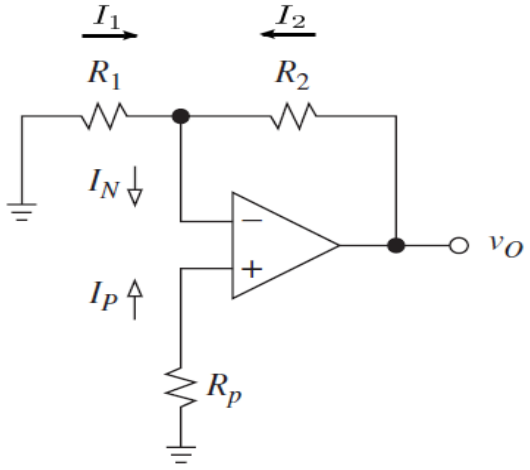

At the inverting input node (V_N), we know $V_o - V_N = R_2 I_2$. Rearrange the equation:

$$V_O = V_N + R_2 I_2 \qquad (6)$$

For the given non-inverting amplifier, by considering (2), put (5) into (6):

$$V_o = V_p + R_2\left(I_N + \frac{R_p}{R_1} I_p\right)$$

$$= I_p R_p + R_2 I_N + I_p R_p \left(\frac{R_2}{R_1}\right)$$

$$= \left(1 + \frac{R_2}{R_1}\right) I_p R_p + R_2 I_N$$

b. The testing circuit as shown in the given figure below can measure bias current in either input. Relays determine the circuit configuration.

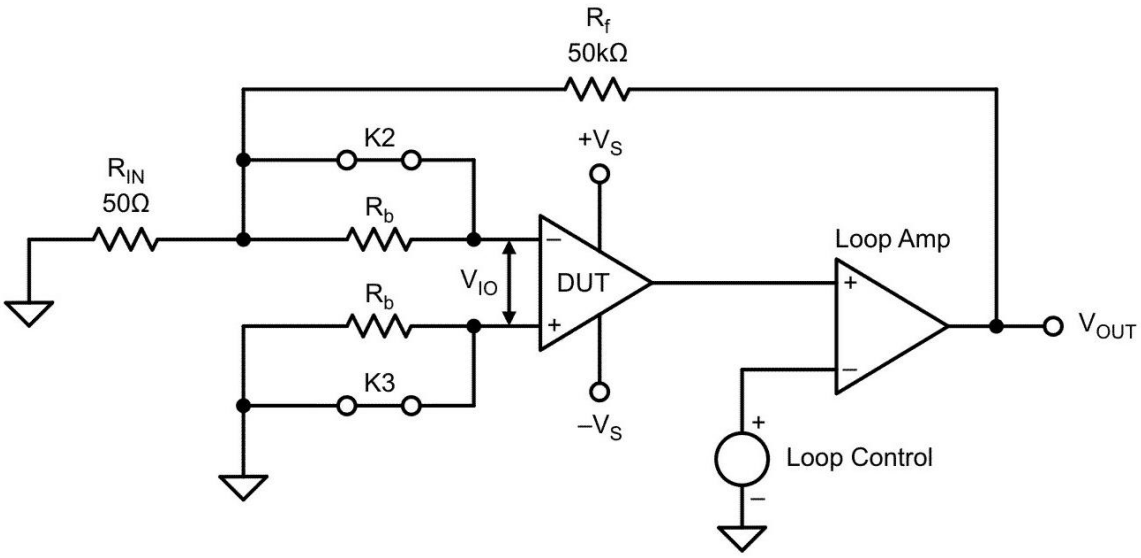

With relays K_2 and K_3 closed, we measure and store the value of V_O using the offset voltage (V_{IO}) measurement technique. The equation below defines V_O as a function of R_{IN}, R_F, and V_{IO}.

$$V_O = \left(\frac{R_{IN} + R_f}{R_{IN}}\right) V_{IO}$$

We rearrange the above equation to get V_{IO} in the equation given below.

$$V_{IO} = \left(\frac{R_{IN}}{R_{IN} + R_f}\right) V_O$$

Next, we open K_2 and make another measurement, which we store as $V_O(I_{B-})$. The measured voltage is caused by the offset voltage of the DUT plus the input bias current flowing through the resistor R_B, expressed in the equation below.

$$V_O(I_{B-}) = \left(\frac{R_{IN} + R_f}{R_{IN}}\right)(V_{IO} + I_{B-} \times R_B)$$

We now solve for i_{B-} by dividing both sides of the equation by $(R_{IN} + R_F)/R_{IN}$ to get the equation shown below.

$$V_O(I_{B-})\left(\frac{R_{IN}}{R_{IN} + R_f}\right) = V_{IO} + I_{B-} \times R_B$$

Then, subtract the device under test (DUT) offset voltage from both sides of the equation given above to get the equation below.

$$V_O(I_{B-})\left(\frac{R_{IN}}{R_{IN} + R_f}\right) - V_{IO} = I_{B-} \times R_B$$

Finally, divide both sides of the equation above by R_B to calculate the value of I_{B-}.

$$I_{B-} = \frac{1}{R_B}\left[V_O(I_{B-})\left(\frac{R_{IN}}{R_{IN} + R_f}\right) - V_{IO}\right]$$

You can use a similar technique to measure I_{B+}. To measure I_{B-}, leave K_3 closed and open K_2. To measure I_{B+}, close K_2 and open K_3. Because we already measured and know the op

amp's V_{IO}, the rest is just math. This result is easy to obtain and requires only a good digital multimeter.

4. The voltage drift in the op amp influences the amount of offset voltage and the accuracy of the voltage at its output. The following table shows the offset and biasing parameters of several op amps.

Op Amp	I_B	I_{OS}	V_{OS}
NE5534	800 nA	10 nA	0.5 mV
LF411	50 pA	25 pA	0.8 mV
LM318	150 nA	30 nA	4 mV
uA741	80 nA	20 nA	1 mV

a. Determine the typical output offset voltage for the circuit of the figure below if R_{off} is 0 Ω. Then, determine an optimum size for R_{off} and calculate the new offset. [12 marks]

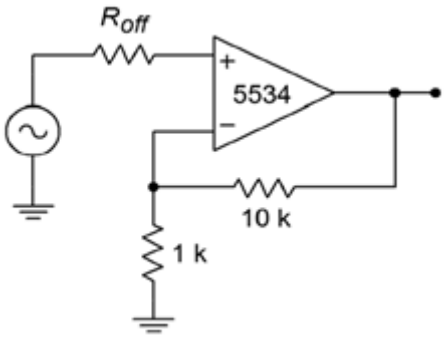

b. The circuit of the figure below is used as part of a transducer-based measurement system. Assuming that the DC input signal is 3 mV, how much uncertainty is there in the output voltage typically? [10 marks]

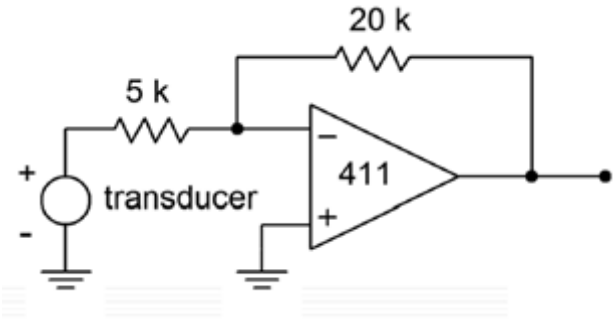

c. Determine the output drift for the circuit of the figure below for a target temperature of 80°C. Assume that R_{off} = 909 Ω and that the circuit has been nulled at 25°C. [6 marks]

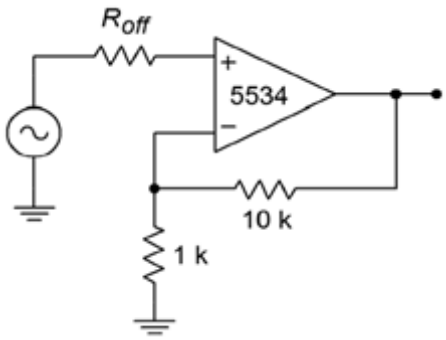

Solution

a. From the datasheet for the NE5534 op amp, we find V_{os} = 0.5 mV, I_{os} = 10 nA, and I_B = 800 nA.

Op Amp	I_B	I_{OS}	V_{OS}
NE5534	800 nA	10 nA	0.5 mV
LF411	50 pA	25 pA	0.8 mV
LM318	150 nA	30 nA	4 mV
uA741	80 nA	20 nA	1 mV

Because this is an approximation, assume $I_{B+} = I_{B-} = I_B$.

The noise gain of the given amplifier circuit is:

$$A_{\text{noise}} = 1 + \left(\frac{R_2}{R_1}\right) = 1 + \left(\frac{10\ \text{k}\Omega}{1\ \text{k}\Omega}\right) = 11$$

The offset voltage at the output is:

$$\begin{aligned} V_{\text{out-offset}} &= V_{os}A_{\text{noise}} + \left|I_{B+}R_{\text{off}}A_{\text{noise}} - I_{B-}R_f\right| \\ &= (0.5\ \text{mV})(11) + \left|(800\ \text{nA})(0)(11) - (800\ \text{nA})(10\ \text{k}\Omega)\right| \\ &= 5.5\ \text{mV} + 8\ \text{mV} = 13.5\ \text{mV} \end{aligned}$$

Remember, this is the magnitude of the offset, it could be anywhere within ±13.5 mV. It might be worse if this is not a typical device.

Now, we find the optimum offset compensating resistor:

$$R_{\text{off}} = R_1 \parallel R_2 = 1\ \text{k}\Omega \parallel 10\ \text{k}\Omega = 909\ \Omega$$

For this case, the offset equation reduces to:

$$\begin{aligned} V_{\text{out-offset}} &= V_{os}A_{\text{noise}} + I_{os}R_f \\ &= (0.5\ \text{mV})(11) + (10\ \text{nA})(10\ \text{k}\Omega) \\ &= 5.5\ \text{mV} + 100\ \mu\text{V} = 5.6\ \text{mV} \end{aligned}$$

By adding R_{off}, the output offset voltage is more than halved. This may lead you to think that it is always wise to add R_{off}. Such is not the case. There are two times when you may prefer to leave it out:

- to optimize noise characteristics and
- when using FET input op amps. FET input devices have very small input bias and offset currents to begin with, so their effect is negligible when using typical resistor values.

b. The desired output from the amplifier is:

$$V_{out} = A_v V_{in} = -\left(\frac{R_2}{R_1}\right) V_{in} = -\left(\frac{20\ \text{k}\Omega}{5\ \text{k}\Omega}\right) 3\ \text{mV} = -12\ \text{mV}$$

From the table, the typical specs for the LF411 are V_{os} = 0.8 mV, I_{os} = 25 pA, and I_B = 50 pA

Op Amp	I_B	I_{OS}	V_{OS}
NE5534	800 nA	10 nA	0.5 mV
LF411	50 pA	25 pA	0.8 mV
LM318	150 nA	30 nA	4 mV
uA741	80 nA	20 nA	1 mV

The noise gain of the amplifier circuit is:

$$A_{\text{noise}} = 1 + \left(\frac{R_2}{R_1}\right) = 1 + \left(\frac{20\ \text{k}\Omega}{5\ \text{k}\Omega}\right) = 5$$

The offset voltage at the output of the amplifier is:

$$\begin{aligned} V_{\text{out-offset}} &= V_{os} A_{\text{noise}} + \left| I_{B+} R_{\text{off}} A_{\text{noise}} - I_{B-} R_f \right| \\ &= (0.8\ \text{mV})(5) + |(50\ \text{pA})(0)(5) - (50\ \text{pA})(20\ \text{k}\Omega)| \\ &= 4\ \text{mV} + 1\ \mu\text{V} = 4\ \text{mV} \end{aligned}$$

The output can vary by as much as ±4 mV. As this a DC measurement system, the results are devastating.

The output can be anywhere from −12 mV − 4 mV = −16 mV, to −12 mV + 4 mV = −8 mV. That is a 2:1 spread, and it is caused solely by the op amp.

Note that the addition of R_{off} would have little effect here. Because the 411 op amp uses a FET input, its I_B contribution is only 1 µV.

c. From its manufacturer datasheet, the parameters for the NE5534 op amp are $\Delta V_{OS}/\Delta T$ = 5 µV/°C, $\Delta I_{OS}/\Delta T$ = 200 pA/°C.

The noise gain was already determined to be:

$$A_{\text{noise}} = 1 + \left(\frac{R_2}{R_1}\right) = 1 + \left(\frac{10\ \text{k}\Omega}{1\ \text{k}\Omega}\right) = 11$$

The total temperature change is from 25°C to 80°C, or 55°C.

$$\begin{aligned} V_{\text{drift}} &= \left(\frac{\Delta V_{os}}{\Delta T}\right)\Delta T A_{\text{noise}} + \left(\frac{\Delta I_{os}}{\Delta T}\right)\Delta T R_f \\ &= (5\ \mu\text{V/°C})(55°\text{C})(11) + (200\ \text{pA/°C})(55°\text{C})(10\ \text{k}\Omega) \\ &= 3.025\ \text{mV} + 0.11\ \text{mV} = 3.135\ \text{mV} \end{aligned}$$

Note that for this circuit the V_{os} drift is the major source of error. At 80°C, the output of the circuit may have up to ±3.135 mV of DC error.

5. CMRR and PSRR are some of the performance measurement parameters of practical op amp. The values of these parameters are typically shown in the manufacturer datasheet of the op amp.

   a. An amplifier has a closed loop voltage gain of 20 dB and a common mode rejection ratio (CMRR) of 90 dB. If a common-mode signal is applied to the input at −60 dBV, what is the output? [4 marks]

   b. An op amp is operated off a power supply that has a peak-to-peak ripple voltage of 0.5 V. If the op amp's power supply rejection ratio (PSRR) is 86 dB, how much of this ripple is seen at the circuit output? [4 marks]

Solution

a. If the input signal were differential instead of common mode, the output would be:

$$V'_{out} = A'_v + V'_{in} = 20\ \text{dB} + (-60\ \text{dBV}) = -40\ \text{dBV}$$

Because this is a common-mode signal, it is reduced by the CMRR.

$$V'_{out} = -40\ \text{dBV} - 90\ \text{dB} = -130\ \text{dBV}$$

This signal is so small that it is probably overshadowed by the circuit noise.

b. First, determine the $PSRR$ as an ordinary value.

$$PSRR = \log\left(\frac{PSRR_{dB}}{20}\right)^{-1} = \log\left(\frac{86\ \text{dB}}{20}\right)^{-1} = 20{,}000$$

Divide the ripple voltage by the $PSRR$ to find the amount that is seen at the output.

$$V_{out-ripple} = \frac{V_{ripple}}{PSRR} = \frac{0.5\ V_{pp}}{20{,}000} = 25\ \mu\text{V}_{\text{pp}}$$

B. Nulling Circuits for Op Amp based Circuits

6. You are required to determine the nulling circuit for inverting amplifier circuit given below (e.g. V_{CC} = +15 V and V_{EE} = -15 V).

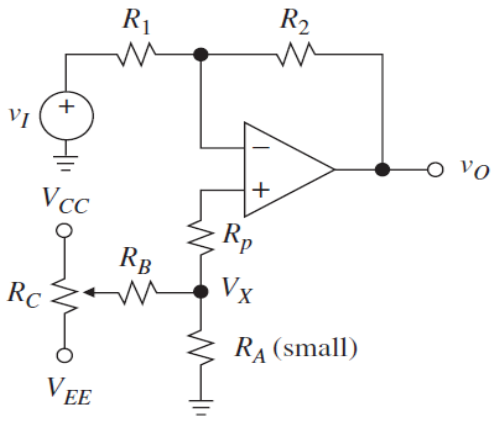

Note that LM741 op amp is used in this circuit has DC gain of A_{DC} = 5 V/V and input impedance, Z_{in} = 30 kΩ.

For a LM741 op amp, the manufacturer's data sheet shows V_{OS} = 2 - 6 mV and $I_{OS} \leq$ 200 nA. Find the values of R_1, R_2, R_A, R_B, R_C, and R_P. [24 marks]

Solution

For an inverting amplifier, R_1 is the input impedance of the amplifier:

$$R_1 = Z_{in} = 30\ \text{k}\Omega$$

The gain of inverting amplifier is found from:

$$A_v = -\left(\frac{R_2}{R_1}\right) = -5\ \text{V/V}$$

As a result, $R_2 = 5R_1 = 150\ \text{k}\Omega$

We want $R_p \approx R_1 \parallel R_2$ to minimise any effect due to I_B

$R_1 \parallel R_2 = 25\ \text{k}\Omega$, so choose R_P = 24 kΩ (E24 series)

$$R_A = R_1 \parallel R_2 - R_p = 1\ \text{k}\Omega$$

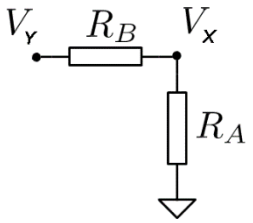

To find values of resistors R_A and R_B, we need to know expected parasitic input voltage, V_{IA}, due to V_{OS} and I_{OS}. For a LM741 op amp, the manufacturer's data sheet tells us V_{OS} = 2 - 6 mV and $I_{OS} \leq$ 200 nA. So

$$V_{IA}(\max) = V_{os}(\max) + (R_1 \parallel R_2) I_{OS}(\max)$$

$$= 6\text{ mV} + (25\text{ k}\Omega)(200\text{ nA}) = 11\text{ mV}$$

To cancel up to ± 11 mV at V+, we need ± 11 mV at V_x. But

$$V_x = V_y\left(\frac{R_A}{R_B + R_A}\right)$$

With V_y is to be as large as ± 15 V, so, allowing V_x up to ± 15 mV instead of ± 11 mV to give some extra head room.

$$\frac{V_x}{V_y} = \frac{R_A}{R_A + R_B} = \frac{15 \times 10^{-3}}{15} = \frac{1}{1000}$$

As a result,

$$R_B \approx 1000 \times R_A = 1\text{ M}\Omega$$

Finally, we want $R_C \ll R_B$, so that nulling voltage at V_x is approximately linear with variation in R_C wiper. So, choose R_C = 100 kΩ (i.e. common or typical value for a potentiometer). Note that $R_A + R_B$ = load on R_C divided by e_v.

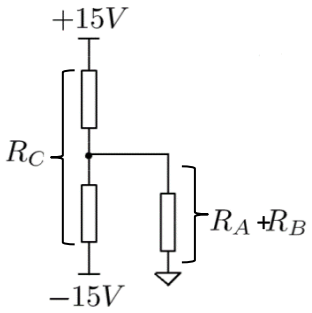

7. For LM741 op amp based non-inverting amplifier given below, determine its nulling circuit. Knowing its DC gain, A_{DC} = 100 V/V and assuming ± 15 V rails, find values of R_1, R_2, R_A, R_B, R_C, and R_P. [24 marks]

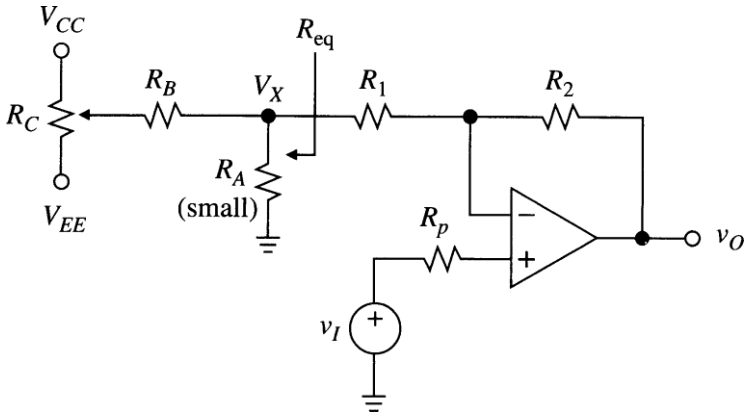

Solution

For R_1, R_2 resistors:

Since we do not have a Z_{in} value, only the ratio of R_2: R_1will matter:

$$A_V = 1 + \frac{R_2}{R_1} = 100 \text{ V/V}$$

As a result, $R_2 = 99R_1$.

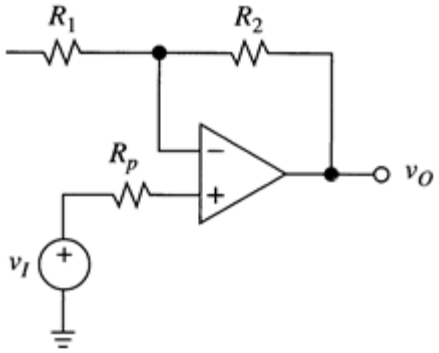

Arbitrarily choose $R_2 = 100$ kΩ, hence R_1 = 1010 Ω (E192 series) (First guess for R_1)

R_P resistor:

$$R_P \approx R_1 \parallel R_2 = 1 \text{ k}\Omega$$

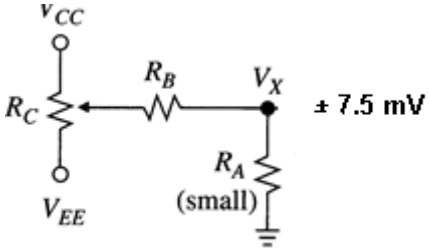

R_A resistor:

We want $R_A \ll R_1$, so choose R_A = 101 Ω and change from R_1 = 1010 Ω to R_1 = 909 Ω i.e. both resistors are E192 series values, so we can choose R_A = 102 Ω at ± 1% tolerance (E92 series).

R_B and R_C:

To find R_B and R_C, we need to know expected range of nullity voltages. Manufacturer's data sheet of LM741 gives us V_{OS} = 2 - 6 mV and $I_{OS} \leq$ 200 nA, but these are for a hypothetical source placed at pin V+ in the op amp. We need to refer these values to the output, and then to V-, before we can determine R_B and R_C. At output, total offset due to V_{OS} and I_{OS}, $V_{OB}(\max)$, is up to:

$$\begin{aligned} V_{OB}(\max) &= A_v(V_{OS} + I_{OS}R_P) \\ &= 100 \times (6 \times 10^{-3} + 200 \times 10^{-9} \times 1 \times 10^{3}) \\ &= 620 \times 10^{-3} \text{ Volt} \end{aligned}$$

Hence

$$V_{-A}(\max) = \frac{V_{OB}(\max)}{R_2/R_1} = \frac{620 \times 10^{-3} \times 909}{100 \times 10^{3}} = 5.6 \text{ V}$$

Note that R_2/R_1 is not A_V, so, we need to null up to ± 5.6 mV, say that ± 7.5 mV to be safe.

$$\frac{R_A}{R_A + R_B} = \frac{V_x}{V_{CC}} = \frac{7.5 \times 10^{-3}}{15} = \frac{1}{2000}$$

So,

R_A = 2000 R_B = 200 kΩ.

We want $R_C \ll R_B$, choose R_C = 10 kΩ or 50 kΩ or even 100 kΩ, but no larger as R_B was chosen as 200 kΩ.

8. Given the following OP37 @ 25°C op amp-based instrumentation amplifier, design its nulling circuit. Knowing A_v = 1 V/mV, I_B = 37 nA, I_{OS} = ±80 nA, V_{OS} = 100 µV and ±15 V power supply rails, find values of R_A, R_B, and R_C. [60 marks]

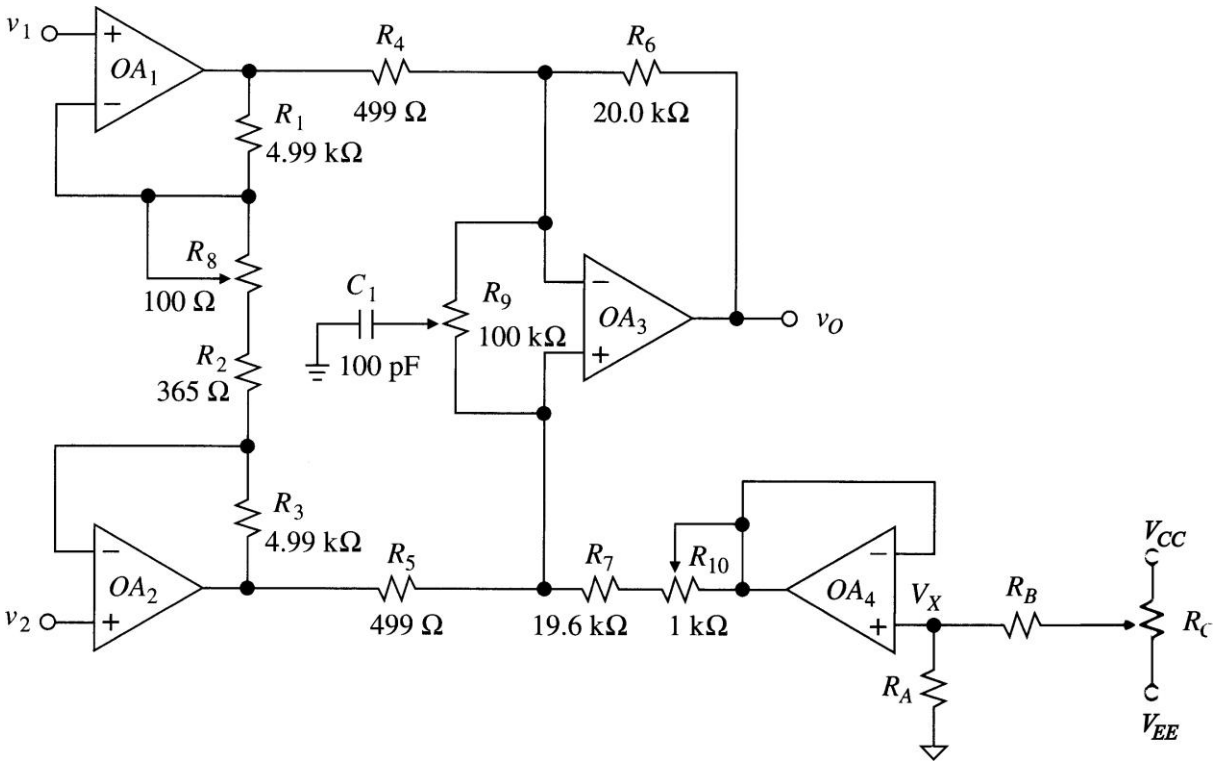

Solution

First, some comments on the circuit:

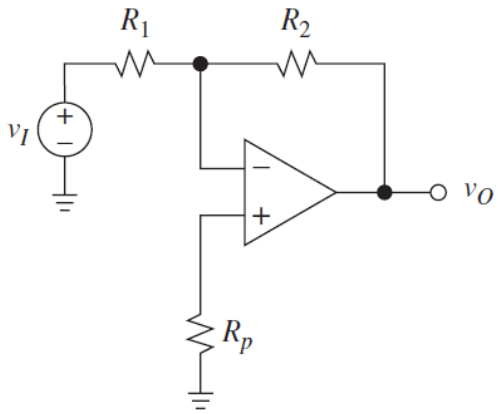

R_8: Trim to give:

$$A_{Vcc} = 1000 = \left(1 + \frac{2R_3}{R_2 + R_8}\right)\frac{R_6}{R_4} \qquad (1)$$

R_9: Trim for minimum V_{out} at $V_{CM} = 20\ V_{pp}$ at 10 kHz (i.e. minimise CMRR at 10 kHz).

R_{10}: Trim for DC CMRR, i.e. minimum V_{out} at $V_{CM} = 20\ V_{pp}$ DC.

R_A: Previously, we wanted:

$R_A = R_1 \parallel R_2 - R_p$ (for inverting amplifier)

Here, size of R_A doesn't matter for I_B cancellation because of OA_4 voltage follower. Now we need R_A to scale V_{CC} - V_{EE} range down to $\pm V_{null}$ (in collaboration with R_B). So

$$\frac{R_A}{R_A + R_B} = \frac{\pm V_{null}}{\pm V_{cc}}$$

But, what is V_{null}? We want to cancel offsets from OA_1, OA_2, and OA_3. So

$$V_{null} = V_{I_1}\left(1 + \frac{2R_3}{R_G}\right) + V_{I_2}\left(1 + \frac{2R_3}{R_G}\right) + V_{I_3} \qquad (2)$$

Then, we know that offset voltage and bias current affecting instrumentation amplifier.

$$V_{I_1} = V_{I_2} = V_{OS} + \left[R_1 \parallel \left(\frac{R_2 + R_8}{2}\right)\right] I_B \qquad (3)$$

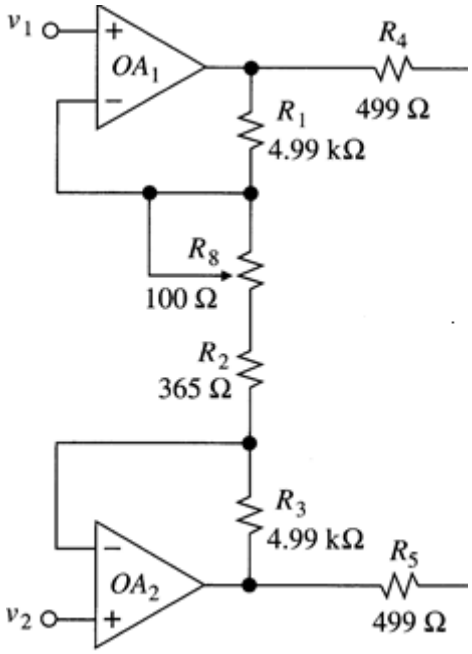

What value should R_8 take? We want:

$$A_V = 1\ \text{V/mV} = \left(1 + \frac{2R_3}{R_G}\right)\left(\frac{R_6}{R_4}\right) = 1000$$

But,

$$\frac{R_6}{R_4} = \frac{20 \times 10^3}{499} = 40.08$$

So

$$\left(1 + \frac{2R_3}{R_G}\right) = \frac{1000}{40.08} = 24.95$$

Rearrange the above equation, as a result $R_3 = 11.975 \times R_G$ = 4.99 kΩ. Then

$$R_G = 416 = R_2 + R_8$$

As a result, $R_2 = 365\ \Omega$ from the circuit diagram and as a result R_8 = 51 Ω.

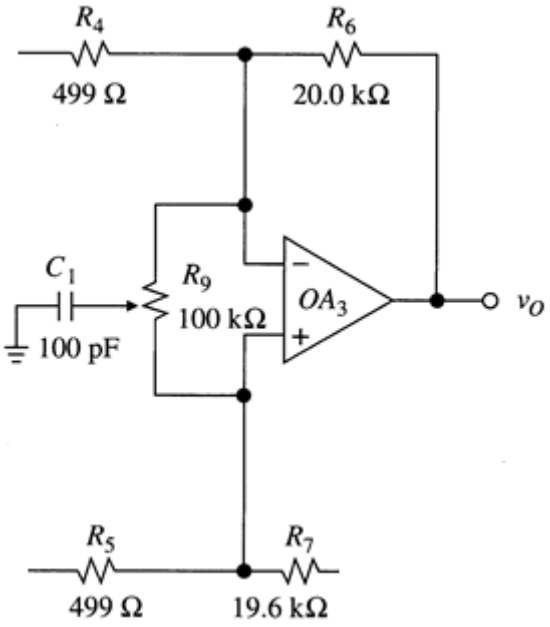

From (3), knowing R_G (and R_8), we can calculate V_{I_1} and V_{I_2} in the first buffer stage of instrumentation amplifier.

$$V_{I_1} = V_{I_2} = V_{OS} + \left[R_1 \parallel \left(\frac{R_2 + R_8}{2}\right)\right] I_B$$

$$= 100\ \mu\text{V} + [4.99 \times 10^3 \parallel 416/2] \times 37 \times 10^{-9} = 107 \times 10^{-6}\ \text{Volt}$$

Now, find V_{I_3} for the second stage of instrumentation amplifier (differential amplifier):

$$V_{I_3} = V_{OS} + [R_4 \parallel R_6] I_{OS}$$

$$= 100 \times 10^{-9} + \left(\frac{499}{20} \times 10^3\right) \times 80 \times 10^{-9} = 139 \times 10^{-9}$$

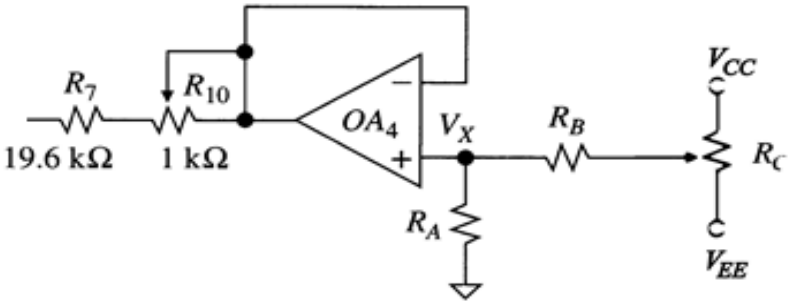

So, remember $R_G = R_2 + R_8$. From (2), then the V_{null} is:

$$V_{null} = 2V_{I_1}\left(1 + \frac{2R_3}{R_G}\right) + V_{I_3}$$

$$= 2(107 \times 10^{-9})\left(1 + \frac{2 \times 4.99 \times 10^3}{416}\right) + 139 \times 10^{-9} = 5.5 \times 10^{-6}\ \text{V}$$

Say $\pm 7.5 \times 10^{-3}$ Volt to be sure.

Knowing V_{null} and V_{CC}, we can go back to find a ratio for $R_1 : R_2$

$$\frac{R_A}{R_A + R_B} = \frac{V_{null}}{V_{CC}} = \frac{\pm 7.5 \times 10^{-3}}{\pm 15} = 0.5 \times 10^{-3}$$

Rearrange the equation above. So,

$$R_B \approx 2000 \times R_A$$

Say, R_A = 499 Ω, and R_B = 1 MΩ. Finally, we want $R_C \ll R_B$, say R_C = 100 kΩ.

C. Dynamic Limitation of Op Amp

9. Transient performances of op amp show further dynamic limitations of op amp.

   a. Define dynamic limitations of the op amp. Explain how a real op amp has imperfections with its gain, rise time, slew rate and bandwidth. [4 marks]

   b. Derive the equation for determining transfer function of a non-inverting amplifier with a finite gain, a as shown below. Calculate the gain of the following non-inverting amplifier if R_1 = 1 kΩ and R_2 = 10 kΩ and open loop gain of the op amp, a = 100. [8 marks]

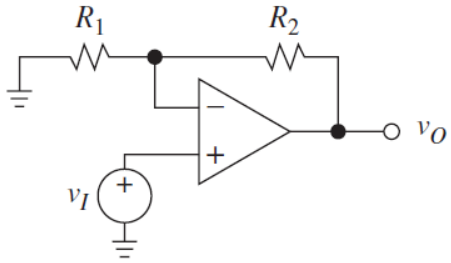

Solution

a. Dynamic limitations of the op amp are imperfections arisen from op amp device and circuit arrangements. These are about the differences between real vs. ideal performance. The details of these limitations are complex and application specific.

- Finite gain – Real op amp has a finite (non-infinity) open loop gain.
- Rise time – It will take some time for the waveform in the op amp to rise up.
- Slew rate – Real op amp has considerable rate of change for waveform to change state.
- Bandwidth – Real op amp has a limited span of bandwidth of useful operating frequency as there are parasitic components that will become significant at higher frequency and determine the length of bandwidth available for actual application.

b. For a non-Inverting amplifier with a as open loop gain, the voltage at node N is:

$$V_N = \left(\frac{R_1}{R_1 + R_2}\right) V_O \qquad (1)$$

The output of the non-inverting amplifier is given as

$$V_O = a(V_I - V_N) \qquad (2)$$

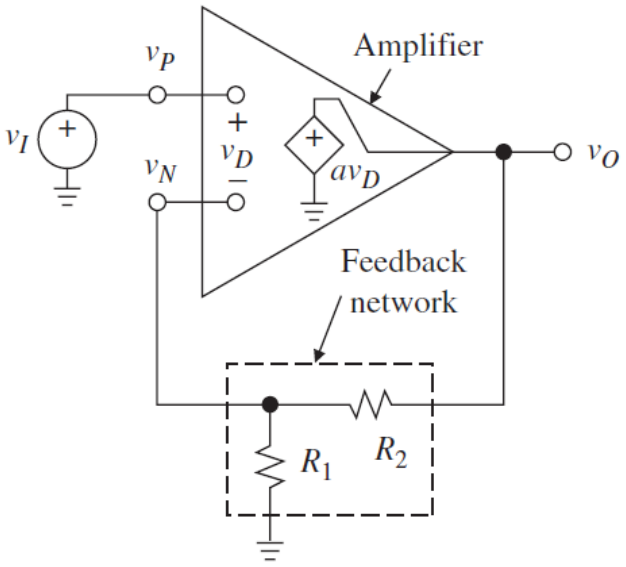

Substitute the equation (1) into equation (2), thus:

$$V_O = a\left[V_I - \left(\frac{R_1}{R_1 + R_2}\right)V_O\right]$$

Rearrange the equation given above,

$$aV_I = \left[1 + \left(\frac{aR_1}{R_1 + R_2}\right)\right]V_O$$

Thus, the transfer function of the non-inverting amplifier is:

$$\frac{V_O}{V_I} = \frac{a}{\left[1 + \left(\frac{aR_1}{R_1 + R_2}\right)\right]}$$

Entering the values into the equation given above, the closed loop gain of the non-inverting amplifier with finite gain is:

$$\frac{V_O}{V_I} = \frac{100}{\left[1 + \left(\frac{100(1\,\text{k}\Omega)}{1\,\text{k}\Omega + 10\,\text{k}\Omega}\right)\right]} = 9.91$$

10. Gain bandwidth product of the op amp (GBW) is also referred to as the frequency at which the open loop gain equals one (f_{unity}).

    a. Using a uA741 op amp, what is the upper break frequency for a non-inverting amplifier with a gain of 20 dB? [4 marks]

    b. Sketch the frequency response of the inverting amplifier circuit in the figure given below. [8 marks]

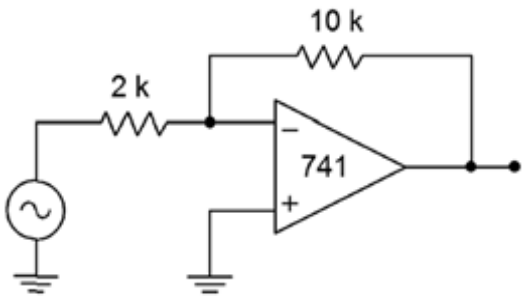

c. Comment on the frequency response of the given amplifier circuit. If a faster op amp is used, how does the frequency response of the amplifier circuit with this op amp differ?

[4 marks]

Solution

a. A uA741 op amp datasheet shows a typical GBW of 1 MHz. The noise gain for a non-inverting amplifier is the same as its ordinary gain. Converting 20 dB into ordinary form yields a gain of 10.

$$f_c = \frac{GBW}{A_{noise}} = \frac{1\text{ MHz}}{10} = 100\text{ kHz}$$

So, the gain is constant at 10 up to 100 kHz. Above this frequency, the gain rolls off at 20 dB per decade.

b. This is an inverting voltage amplifier. The gain is:

$$A_v = -\left(\frac{R_2}{R_1}\right) = -\left(\frac{10\text{ k}\Omega}{2\text{ k}\Omega}\right) = -5 = -14\text{ dB}$$

The noise gain of the amplifier is calculated from:

$$A_{noise} = 1 + \left(\frac{R_2}{R_1}\right) = 1 + \left(\frac{10\text{ k}\Omega}{2\text{ k}\Omega}\right) = 6$$

From a data sheet, GBW for a uA741 op amp is found to be 1 MHz. So, the cut-off frequency of the amplifier is:

$$f_c = \frac{GBW}{A_{noise}} = \frac{1\text{ MHz}}{6} = 167\text{ kHz}$$

The frequency response of the given inverting voltage amplifier is shown below.

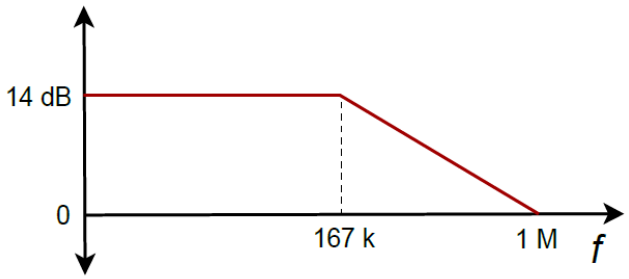

The inverting voltage amplifier has a gain of 14 dB at DC. After 167 kHz, its frequency response is a slope of -20 dB/decade. The unity gain frequency of the amplifier is at 1 MHz.

c. The resulting gain Bode plot is shown in part (b). The gain of the amplifier is 14 dB at low frequency until cut off frequency of 167 kHz. After this frequency, the gain of the amplifier experiences -20 dB/decade slope and at a frequency of about 1 MHz, the gain of the amplifier is 0 dB.

Op Amp	GBW	Price ($)
uA741	1 MHz	1.13
LF411	3 MHz	2.1
OPA134	8 MHz	2.35
NE5534	10 MHz	2.45
LM318	15 MHz	2.95

Note that if a "faster" op amp is used (i.e., one with a higher GBW, such as the LF411 op amp), the response will extend further. As you might guess, faster op amps are also more expensive in price.

11. By combining two or more wide-bandwidth, low-gain stages, a single high-gain, wide-bandwidth system may be produced.

a. Determine the minimum acceptable f_{unity} for the circuit of the figure below if response should extend to at least 50 kHz. [6 marks]

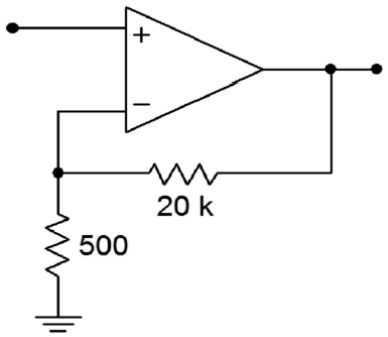

b. Assuming all stages of the amplifier circuit in the figure below use uA741 op amp, what are the system's gain and upper break frequency? [20 marks]

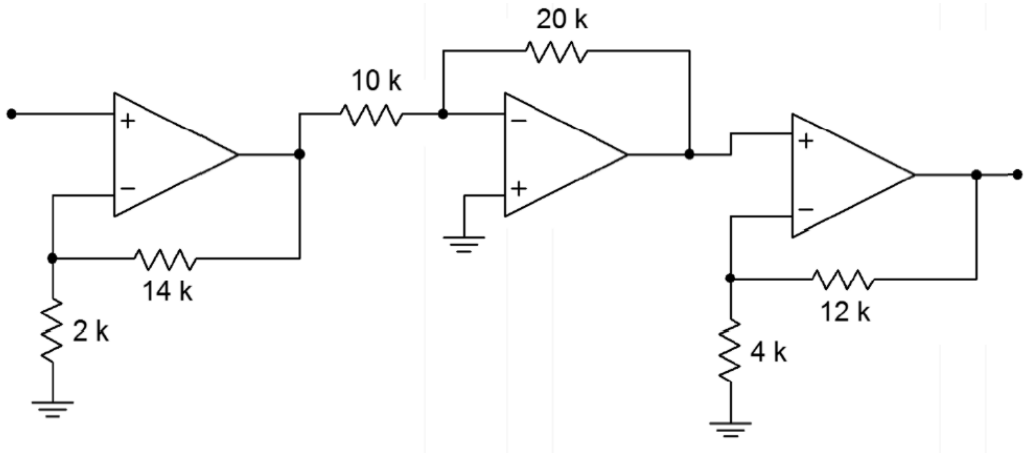

Solution

a. The noise gain of the given non-inverting amplifier is:

$$A_{noise} = 1 + \left(\frac{R_2}{R_1}\right) = 1 + \left(\frac{20\ \text{k}\Omega}{500\ \Omega}\right) = 41$$

The unity frequency of the amplifier circuit is:

$$f_{unity} = A_{noise} f_c = (41)(50\ \text{kHz}) = 2.05\ \text{MHz}$$

For this application, a stock uA741 would not be fast enough. However, a LF411 op amp would be fine.

Op Amp	Unity gain frequency
uA741	1 MHz
LF411	3 MHz
OPA134	8 MHz
NE5534	10 MHz
LM318	15 MHz

From the foregoing, it is apparent that there is a direct trade-off between circuit gain and high frequency performance for a given device.

For an application requiring both high gain and wide bandwidth, a multistage approach should be considered. This is outlined further in the following part (b).

b. For the given multistage amplifier circuit, the overall system consists of three stage 1, 2 and 3 amplifiers.

Stage 1 Amplifier:

Gain of the amplifier is:

$$A_{v1} = 1 + \left(\frac{R_2}{R_1}\right) = 1 + \left(\frac{14\ \text{k}\Omega}{2\ \text{k}\Omega}\right) = 8$$

Noise gain of the amplifier is:

$$A_{noise1} = 1 + \left(\frac{R_2}{R_1}\right) = 1 + \left(\frac{14\ \text{k}\Omega}{2\ \text{k}\Omega}\right) = 8$$

Cut-off frequency of the amplifier is:

$$f_{c1} = \frac{GBW}{A_{noise1}} = \frac{1\ \text{MHz}}{8} = 125\ \text{kHz}$$

Stage 2 Amplifier:

Gain of the amplifier is:

$$A_{v2} = -\left(\frac{R_2}{R_1}\right) = -\left(\frac{20\ \text{k}\Omega}{10\ \text{k}\Omega}\right) = -2$$

Noise gain of the amplifier is:

$$A_{noise2} = 1 + \left(\frac{R_2}{R_1}\right) = 1 + \left(\frac{20\ \text{k}\Omega}{10\ \text{k}\Omega}\right) = 3$$

Cut-off frequency of the amplifier is:

$$f_{c2} = \frac{GBW}{A_{noise2}} = \frac{1\ \text{MHz}}{3} = 333\ \text{kHz}$$

Stage 3 Amplifier:

Gain of the amplifier is:

$$A_{v3} = 1 + \left(\frac{R_2}{R_1}\right) = 1 + \left(\frac{12\ \text{k}\Omega}{4\ \text{k}\Omega}\right) = 4$$

Noise gain of the amplifier is:

$$A_{noise3} = 1 + \left(\frac{R_2}{R_1}\right) = 1 + \left(\frac{12\ \text{k}\Omega}{4\ \text{k}\Omega}\right) = 4$$

Cut-off frequency of the amplifier is:

$$f_{c3} = \frac{GBW}{A_{noise3}} = \frac{1\ \text{MHz}}{4} = 250\ \text{kHz}$$

Overall system:

The overall gain of the amplifier is

$$A_v = A_{v1}A_{v2}A_{v3} = (8)(-2)(4) = -64$$

For the given multistage amplifier, f_{cs} = dominant stage. The dominant break is the lowest among the three cut-off frequencies that is 125 kHz (stage 1).

$$125\ \text{kHz} < 250\ \text{kHz} < 333\ \text{kHz}$$

As a result, the system has a gain of 64 and an upper break of 125 kHz.

If this level of performance is to be achieved with a single op amp, it would need a gain-bandwidth product of:

$$GBW = f_{cs}A_v = (125\ \text{kHz})\ (64) = 8\ \text{MHz}$$

12. The system gains and upper break frequency of multistage op-amp based amplifier are typically determined from its stages.

    a. A three-stage amplifier uses identical non-inverting voltage stages with gains of 10 each. If the op amps used have an f_{unity} of 4 MHz, what are the system's gain and upper break frequency? [4 marks]

    b. Using only LF411 op amp, design a circuit with an upper break frequency of 500 kHz and a gain of 26 dB. [14 marks]

Solution

a. Because these are noninverting amplifiers, the noise gain equals the signal gain. The break frequency for each stage is:

$$f_c = \frac{f_{unity}}{A_{noise}} = \frac{4\text{ MHz}}{10} = 400\text{ kHz}$$

Because the three stages are identical, the system will roll off before 400 kHz.

$$f_{cs} = f_c\sqrt{2^{\left(\frac{1}{n}\right)} - 1} = 400\text{ kHz}\sqrt{2^{\left(\frac{1}{3}\right)} - 1} = 203.9\text{ kHz}$$

Note that the system response in this case is reduced about an octave from the single-stage response.

b. A gain of 26 dB translates to an ordinary gain of 20. Assuming a noninverting voltage stage, and noting that $A_{noise} = A_v$, for noninverting form, a single op amp would require an f_{unity} of:

$$f_{unity} = f_c A_v = (500\text{ kHz})(20) = 10\text{ MHz}$$

Because the LF411 op amp has a typical f_{unity} of 4 MHz, at least two stages are required.

There are many possibilities. One option is to set one stage as the dominant stage and set its gain to produce the desired f_c.

The second stage will then be used to make up the difference in gain to the desired system gain.

Stage 1 Amplifier:

The cut-off frequency and voltage gain of the amplifier are:

$$f_c = \frac{f_{unity}}{A_v} \qquad \text{so} \qquad A_v = \frac{f_{unity}}{f_c}$$

So, the gain of the amplifier is:

$$A_v = \frac{4\text{ MHz}}{500\text{ kHz}} = 8$$

Stage 2 Amplifier:

To achieve a final gain of 20, stage two requires a gain of 2.5. Its f_c is:

$$f_c = \frac{f_{unity}}{A_v} = \frac{4\ \text{MHz}}{2.5} = 1.6\ \text{MHz}$$

Note that if this frequency worked out to less than 500 kHz, three or more stages would be needed.

To set the resistor values, the rules of thumb presented in previous tutorial may be used. One possible solution is shown in the figure below.

First and second stages:

The values of resistors of the first stage are $R_1 = 1\ \text{k}\Omega$ and $R_2 = 7\ \text{k}\Omega$ and the second stage are $R_1 = 10\ \text{k}\Omega$ and $R_2 = 15\ \text{k}\Omega$.

$$A_{v1} = \left(1 + \frac{R_2}{R_1}\right) = 1 + \left(\frac{7\ \text{k}\Omega}{1\ \text{k}\Omega}\right) = 8 \qquad A_{v2} = \left(1 + \frac{R_2}{R_1}\right) = 1 + \left(\frac{15\ \text{k}\Omega}{10\ \text{k}\Omega}\right) = 2.5$$

Overall:

$$A_v = A_{v1}A_{v2} = (8)(2.5) = 20$$

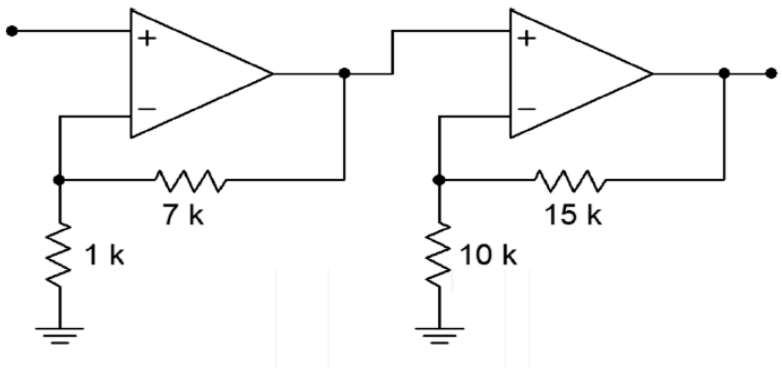

13. For a given electronic circuit based on a generic op amp for audio applications, the open loop gain of the op amp is given as 10^6.

    a. Design amplifier with a gain of 60 dB. [10 marks]

    b. Sketch its magnitude plot. [4 marks]

    c. Find its actual bandwidth. [6 marks]

    The gain plot of the open loop frequency response of the op amp is shown in the figures below.

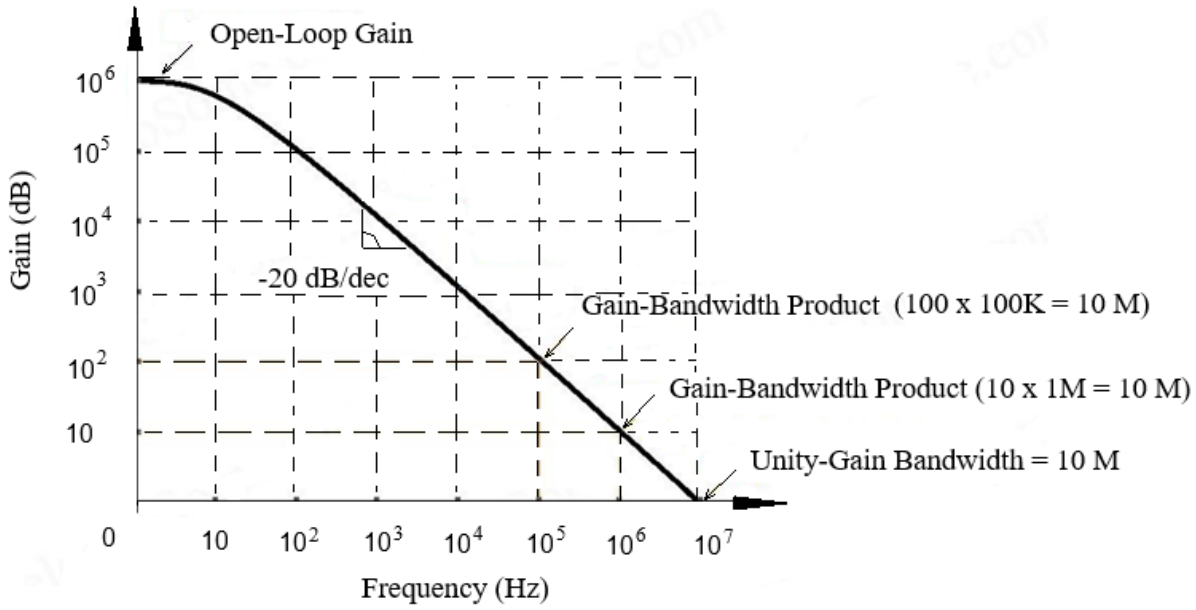

Solution

a. Since the gain of the generic amplifier is required to be:

$$\text{Gain of the Amplifier} = 10^{\left(\frac{60}{20}\right)} = 10^3$$

As a result, the design calls for an amplifier with A_0 = 10^3 V/V and $f_B \geq 20$ kHz. A single op amp will not be sufficient, because it would have available frequency bandwidth:

$$f_B = \frac{10^6}{10^3} = 1 \text{ kHz}$$

Let us try cascading two non-inverting stages with lesser individual gains but wider bandwidths, as depicted in figure given below.

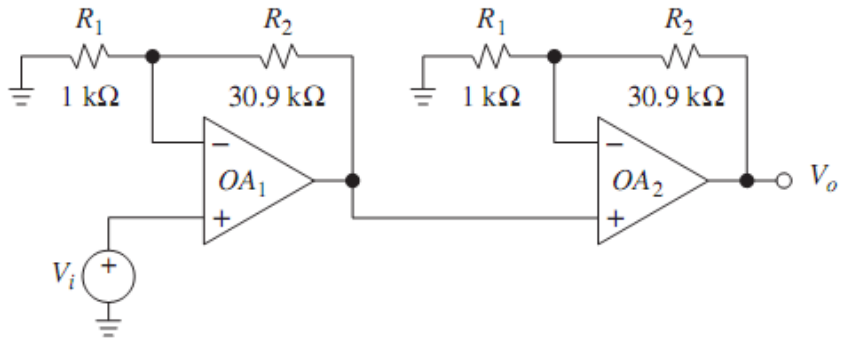

Denoting the individual gains as A_1 and A_2, the overall gain is then

$$A = A_1 \times A_2 = \left(\frac{30.9 \text{ k}\Omega}{1 \text{ k}\Omega}\right)\left(\frac{30.9 \text{ k}\Omega}{1 \text{ k}\Omega}\right) \approx 1000 \text{ V/V, or } 60 \text{ dB}$$

One can easily prove that the widest bandwidth for A is achieved when A_1 and A_2 are made equal, or

$$A_{10} = A_{20} = \sqrt{1000} = 31.62 \text{ V/V, or } 30 \text{ dB}$$

Then, frequency bandwidth of each op amp is:

$$f_{B1} = f_{B2} = \frac{BW}{A} = \frac{10^6}{31.62} = 31.62 \text{ kHz}$$

b. To construct the magnitude plot, refer to plot of the gain magnitude vs frequency given in the figure below and note that since $A = A_1^2$, we have $|A|_{dB} = 2|A_1|_{dB}$, indicating that the magnitude plot of A is obtained by multiplying that of A_1 by 2, point by point.

The plot of $|A_1|$ is in turn obtained via the graphical technique as shown in the figure below.

The result is shown in figure given below that shows a graph of the cascading of two amplifiers and resulting frequency response $|A|$. Note $A = A_1 \times A_2$.

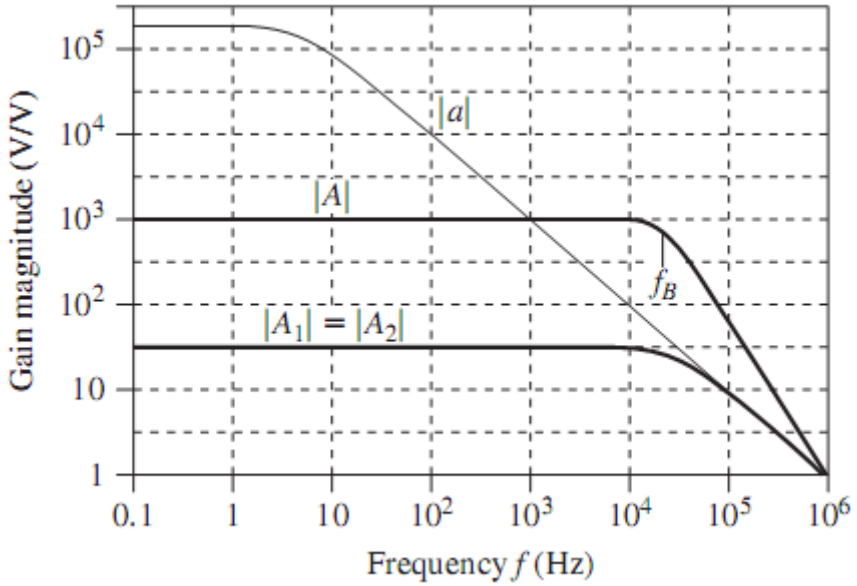

c. Note that at 31.62 kHz both $|A_1|$ and $|A_2|$ are 3 dB below their dc values, making $|A|$ in turn 6 dB below its dc value. The −3-dB frequency f_B is such that gain of each of the amplifiers $|A(j\,f_B)| = 10^3/\sqrt{2}$. But,

$$|A(jf)| = |A1(jf)|^2 = \frac{(31.62)^2}{\left[1 + \left(\frac{f}{f_B}\right)^2\right]}$$

We thus impose:

$$\frac{10^3}{\sqrt{2}} = \frac{(31.62)^2}{1 + \left[\frac{f_B}{(31.62 \times 10^3)}\right]^2}$$

Rearranging the equation, this will obtain:

$$f_B = 31.62 \times 10^3 \times \sqrt{\sqrt{2} - 1} = 20.35 \text{ kHz}$$

This indeed meets the audio bandwidth requirement (e.g. audio bandwidth is about 60 Hz – 20 kHz).

14. Slew rate of the op amp determines not only the transient performance of the op amp, but also its operating bandwidth.

    a. A uA741 op amp is used as part of a motor control system. If the highest reproducible frequency is 3 kHz and the maximum output level is 12 V peak, does slewing ever occur? Is the 741's op amp's power bandwidth at least 3 kHz? [4 marks]

    b. An audio pre-amplifier needs to reproduce signals as high as 20 kHz. The maximum output swing is 10 V peak. What is the minimum acceptable slew rate for the op amp used? [6 marks]

Solution

a. From its datasheet, the slew rate of 741 op amp is 0.5 V/µs. The maximum operational frequency of the op amp is given as:

$$f_{max} = \frac{\text{Slew Rate}}{2\pi V_p} = \frac{0.5\ \text{V/µs}}{2\pi(12\ \text{V})} = 6.631\ \text{kHz}$$

For this application, the uA741 op amp is twice as fast as it needs to be.

Note in the calculation how the slew rate is transferred from V/µs into V/s, and how the volts units cancel between denominator and numerator.

This leaves units of "1/seconds", which is another way of saying "Hertz". If the calculation produced a smaller value, say 2 kHz, then slewing is a possibility for certain signals.

b. For the given audio pre-amplifier circuit, the slew rate is:

$$\text{Slew Rate} = 2\pi V_p f_{max}$$

Entering the values into equation

$$\text{Slew Rate} = 2\pi(10\ \text{V})(20\ \text{kHz}) = 1.257\ \text{MV/s} = 1.257\ \text{V/µs}$$

For this design, a uA741 op amp would not be fast enough.

Op Amp	Slew Rate
uA741	0.5 V/µs
LF411	15 V/µs
OPA134	20 V/µs
LM318	70 V/µs
LM6364	300 V/µs
LT1363	1000 V/µs

The aforementioned LF411 through LM318 op amps would certainly be satisfactory, whereas the LT1363 op amp would probably be too much.

D. Stability of Op Amp

15. Rate of closure of an op amp determines the stability of op amp-based circuit.

    a. Describe rate of closure. State the equation for determining the rate of closure. [4 marks]

    b. Calculate the rate of closure of the of the following op-amp based amplifier circuit if the open-loop gain of the op amp, a at low frequency is 10 and the values of resistors R_1 and R_2 are 1 kΩ and 10 kΩ respectively. [6 marks]

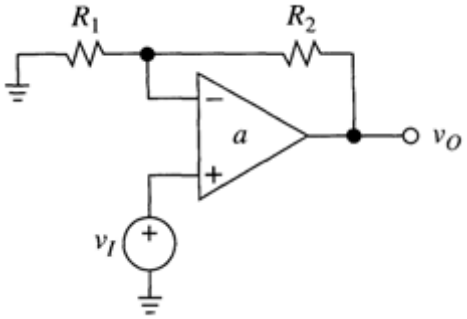

Solution

a. Rate of closure is an analytical tool for estimating the degree of stability (or lack thereof) of a negative-feedback op-amp based amplifier circuit.

Rate of closure or ROC is defined as the difference between the slopes of the $|1/\beta|$ and of the $|a|$ curves right at the crossover frequency.

$$\text{ROC} = \text{slope of } \left|\frac{1}{\beta(jf_x)}\right| - \text{slope of } |a(jf_x)|$$

b. With gain, a = 10 at low frequency, find the Rate of Closure of the non-inverting amplifier circuit. The equation for determining its feedback loop is:

$$\beta = \frac{R_1}{R_1 + R_2} = \frac{1}{1+10} \approx 0.1$$

Thus,

$$\frac{1}{\beta} = 10$$

Applying the ROC equation, the rate of closure is:

$$\text{ROC} = |da - d(1/\beta)|$$

For stable system, the ROC < 40 dB, the ROC of the non-inverting amplifier is:

$$\text{ROC} = |-20 - 20| = 40 \text{ dB/dec}$$

So, the non-inverting amplifier is marginally stable at the curve's intersection.

The slope of da depends on the open loop gain of the amplifier i.e. -20 dB/dec and slope of $1/\beta$ is 20 dB/dec.

16. For a given multistage three-pole op amp circuit operating under different amounts of feedback, the transfer function of the amplifier is:

$$G(s) = \frac{100 \times 10^3}{\left(1 + \frac{s}{2\pi \times 10^3}\right)\left(1 + \frac{s}{2\pi \times 10^5}\right)\left(1 + \frac{s}{2\pi \times 10^7}\right)}$$

The following graphs outline: the open-loop magnitude and phase plots for the op amp (a) and linearized magnitude plot associating phase with slope (b).

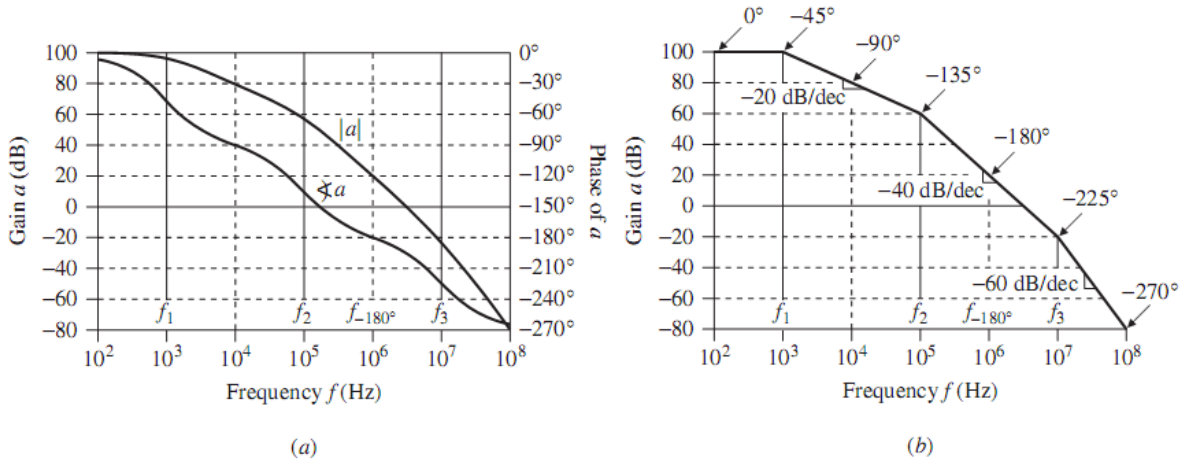

a. What is the minimum allowable noise gain $1/\beta$ if we want to operate the amplifier with a phase margin of 60°? [10 marks]

b. Find discrepancy function $D(jf_x)$ of the circuit feedback system. [6 marks]

c. Comment on the results that you found in (a) and (b). [6 marks]

Solution

a. By using the equation given below, the phase margin of the frequency response of a circuit is given as:

$$\phi_m = 180° + \sphericalangle T(jf_x)$$

We have the phase angle as:

$$\sphericalangle T(jf_x) = \phi_m - 180° = 60° - 180° = -120°$$

A look at figure given below, it indicates that the frequency of this phase angle, $f_{-120°}$ is about an octave below 100 kHz.

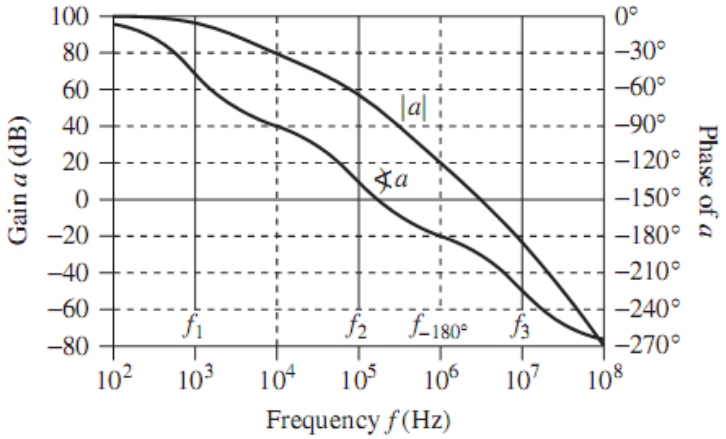

Then, the phase shift of the frequency response of the amplifier circuit is given by the following equation:

$$\measuredangle a(jf_x) = \left[\tan^{-1}\left(\frac{f}{10^3}\right) + \tan^{-1}\left(\frac{f}{10^5}\right) + \tan^{-1}\left(\frac{f}{10^7}\right)\right]$$

Start out with the initial estimate $f_{-120°}$ = 50 kHz and iterate using the equation above until you settle at $f_{-120°}$ = 59.2 kHz.

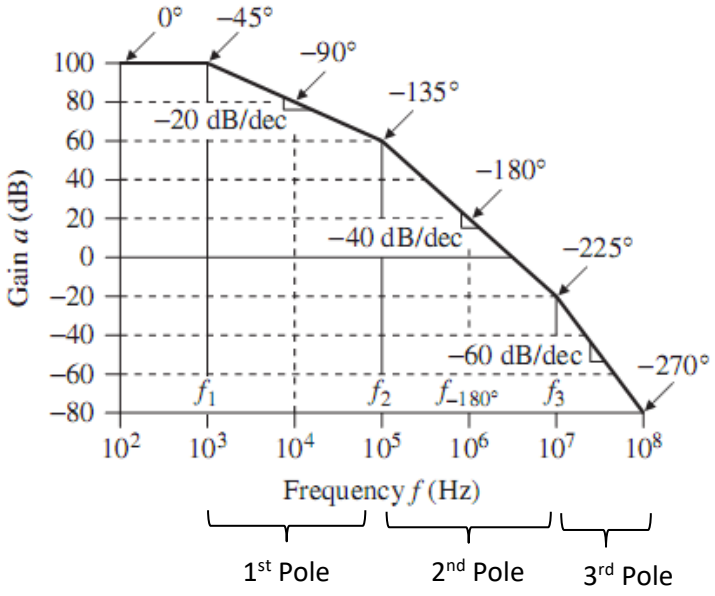

Next, use the open loop equation given below to calculate that the magnitude of the frequency response of the amplifier circuit.

$$|a(jf_x)| = \frac{10^5}{\sqrt{\left[1 + \left(\frac{f}{10^3}\right)^2\right] \times \left[1 + \left(\frac{f}{10^5}\right)^2\right] \times \left[1 + \left(\frac{f}{10^7}\right)^2\right]}}$$

Entering the values into the equation (f = 50 kHz).

$$|a(jf_{-120^\circ})| = \frac{10^5}{\sqrt{\left[1+\left(\frac{50\text{ k}\Omega}{10^3}\right)^2\right]\times\left[1+\left(\frac{50\text{ k}\Omega}{10^5}\right)^2\right]\times\left[1+\left(\frac{50\text{ k}\Omega}{10^7}\right)^2\right]}} \cong 1{,}453\text{ V/V}$$

This is the minimum value of $1/\beta$ for $\phi_m \geq 60°$ with this amplifier.

b. Proceeding in the usual manner, we get the discrepancy function ($D(jf_x)$) of the circuit's feedback system at f_{-120° to be:

$$D(jf_x) \cong \frac{1}{\sqrt{2(1-\cos 60°)}} = 1$$

Since at dc, we have the loop gain of the circuit:

$$T_0 = \frac{10^5}{1453} = 68.8$$

It follows that the discrepancy function at dc is given as:

$$D_0 = \frac{1}{1+\left(\frac{1}{68.8}\right)} = 0.986$$

c. From parts (a) and (b), this is indicating a very small amount of peaking as the result is less than the amount of $|D(jf_x)|$ at f_{-120°.

With

$$\beta = \frac{1}{1{,}453} = 0.688\times 10^{-3}\text{ V/V}$$

We also get a frequency domain and a time domain (i.e. step response for a case of ϕ_m = 60°) plots in the figure (a) and (b) given below respectively.

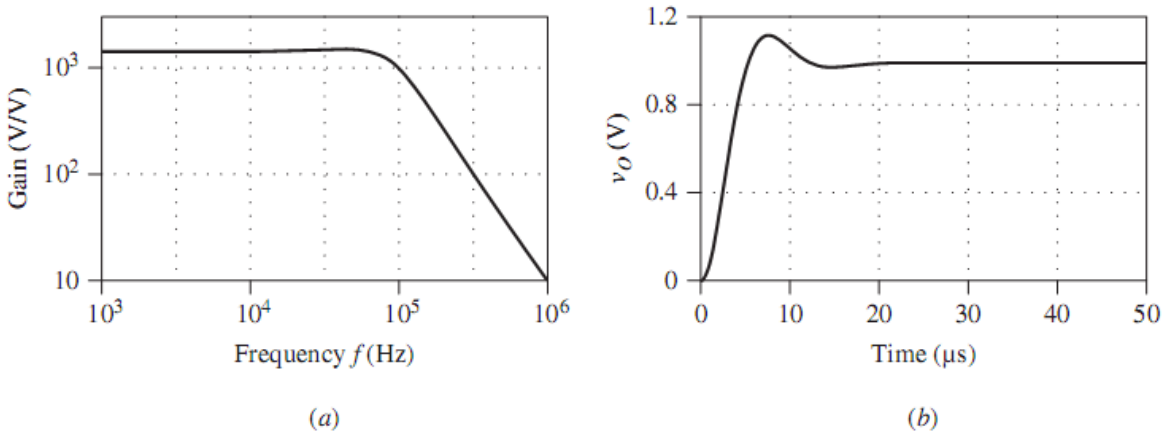

It is fair to say that, aside from a slight amount of peaking and ringing, which is acceptable in many applications, the condition ϕ_m = 60° is almost as good as ϕ_m = 90°.

In terms of stability, yet it expands the range of possible closed-loop gains by decreasing the lower limit of acceptable values for $1/\beta$ from 104 V/V to 1,453 V/V, or by almost 17 dB.

17. To some extent, depending on the type and characteristics of the op amp-based circuit, compensation could potentially fix the stability problem of a given op amp circuit.

    a. Describe different approach for compensating the parasitic capacitance at the input of the op amp circuit for inverting amplifier with non-inverting amplifier. [6 marks]

    b. If we apply the pole-zero cancellation approach, calculate the values of components in the compensation circuit for the following op amp circuit with capacitive input. Consider $R_1 = 1\ \text{k}\Omega$, $R_2 = 1\ \text{k}\Omega$, and parasitic capacitance at the input is measured as 1 pF. [14 marks]

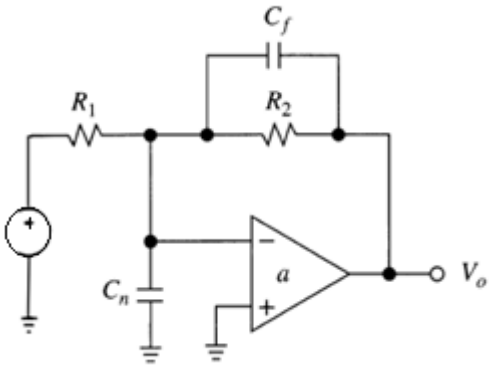

    c. Calculate the values of components in the compensation circuit for the following op amp circuit with capacitive output. The op amp used in the circuit is uA741 with its output impedance is typically about 75 Ω from its datasheet. The values of the circuit components are $R_1 = 1\ \text{k}\Omega$, $R_2 = 10\ \text{k}\Omega$ and load capacitance is measured at 1.5 nF. [10 marks]

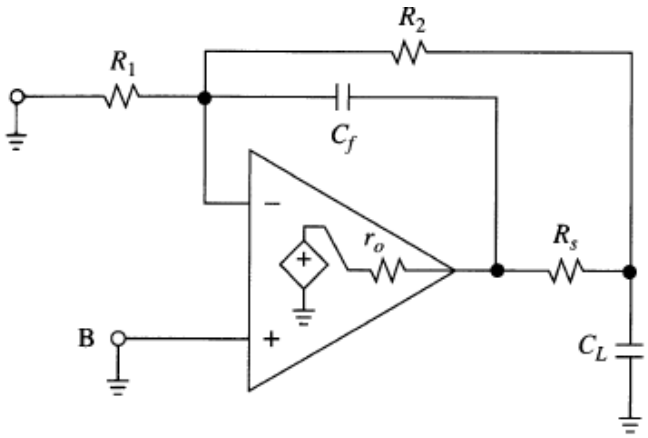

Solution

a. As illustrated in the figure below (left figure), the parasitic capacitances were lumped together for the inverting amplifier.

But, for the non-inverting amplifier as shown below (right figure), we must now split the parasitic capacitance into its various components.

$$C_n = C_d + \frac{C_c}{2} + C_{ext}$$

Where:

- C_d is the differential mode capacitance
- C_c is the common mode capacitance
- C_{ext} is the capacitance of components outside op-amp.

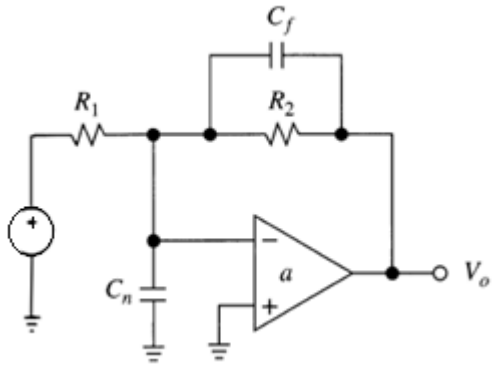

Inverting amplifier

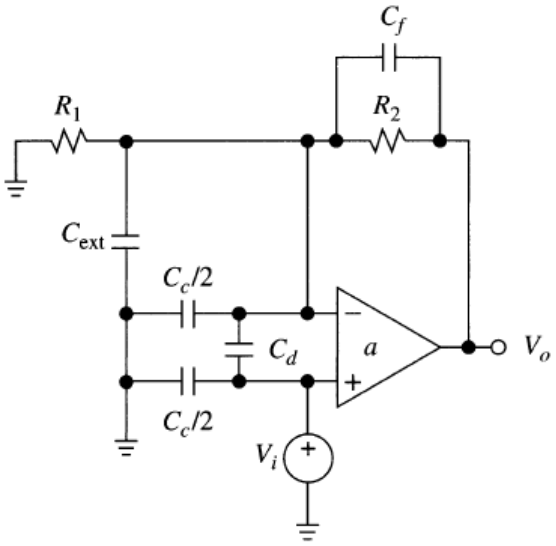

Non-inverting amplifier

b. For the given inverting amplifier circuit as shown above, the frequency of a zero introduced by the input capacitive of the circuit is found from:

$$f_z = \frac{1}{2\pi(R_1 \parallel R_2)(C_n + C_f)}$$

The frequency of the compensating pole added in the feedback path of the inverting amplifier is calculated as:

$$f_p = \frac{1}{2\pi R_2 C_f}$$

For a pole-zero cancellation compensation, the frequency of the compensating pole is made equal to the frequency of the zero.

$$f_p = f_z$$

Substituting both sides of the equations

$$\frac{1}{2\pi R_2 C_f} = \frac{1}{2\pi(R_1 \parallel R_2)(C_n + C_f)}$$

Thus,

$$2\pi R_2 C_f = 2\pi(R_1 \parallel R_2)(C_n + C_f)$$

Rearranging the equation above, the value of compensating feedback capacitor is:

$$C_f = \frac{(R_1 \parallel R_2)(C_n)}{R_2 - (R_1 \parallel R_2)}$$

Applying values into the equation, the compensating feedback capacitor is:

$$C_f = \frac{(1\ \text{k}\Omega \parallel 1\ \text{k}\Omega)(1\ \text{pF})}{1\ \text{k}\Omega - (1\ \text{k}\Omega \parallel 1\ \text{k}\Omega)} = \frac{(0.5\ \text{k}\Omega)(1\ \text{pF})}{1\ \text{k}\Omega\ - 0.5\ \text{k}\Omega} = 1\ \text{pF}$$

c. Considering the inverting amplifier circuit given above, to compensate for capacitive output, we need to set the phase lead produced by C_f to cancel the phase lag caused by C_L.

The value of series connected compensating resistor (R_s) is:

$$R_s = \left(\frac{R_1}{R_2}\right) r_o$$

Entering the values into the equation, the value of the required series connected compensating resistor is:

$$R_s = \left(\frac{1\ \text{k}\Omega}{10\ \text{k}\Omega}\right)(75) = 7.5\ \Omega$$

The value of feedback capacitor (C_f) is:

$$C_f = \left(1 + \frac{R_1}{R_2}\right)^2 \left(\frac{r_o}{R_2}\right) C_L$$

Entering the values into the equation above, the required feedback capacitor is:

$$C_f = \left(1 + \frac{1\ \text{k}\Omega}{10\ \text{k}\Omega}\right)^2 \left(\frac{75\ \Omega}{10\ \text{k}\Omega}\right)(1.5\ \text{nF}) = 13.6\ \text{pF}$$