XMUT303 Analogue Electronics

Tutorial 2: Op Amp Design and Analysis

A. Offset Voltage and Bias Current of Op Amp

1. The input offset voltage is a common dc parameter in the operational amplifier (op amp) design specifications.
   a. State definition of the offset voltage of op amp. [4 marks]
   b. Describe why this offset voltage is an issue in the op amp circuit. [4 marks]
   c. Determine the equation that measure the offset voltage (V_{IO}) in the following non-inverting amplifier circuit. [6 marks]

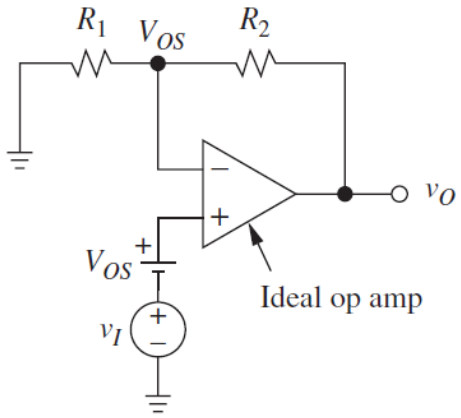

   d. If R_1 = 10 kΩ and R_2 = 100 kΩ, when a 1 μV voltage source v_I is applied in the input, the output voltage, v_O is 0.1 mV. What is the offset voltage of the op amp? [2 marks]

2. Ideally, no current flows into the input terminals of an op amp. In practice, there are always two input bias currents exist in the op amp inputs e.g. non-inverting and inverting bias currents.
   a. Describe how bias current creates problem in application of op amp. [4 marks]
   b. For an inverting amplifier given below, prove that the bias currents of the op amp's contribution to the output voltage is: [8 marks]

$$V_O = -\left(\frac{R_2}{R_1}\right) R_P I_P + R_2 I_N$$

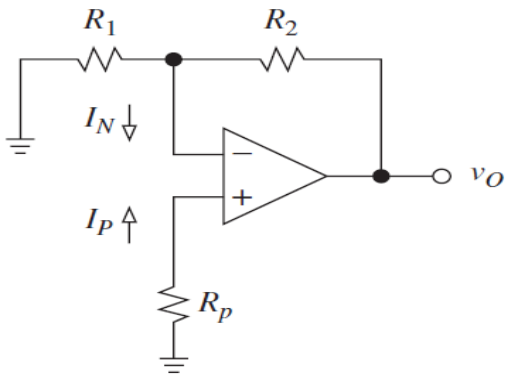

c. If R_1 = 1 kΩ, R_2 = 4.7 kΩ, and R_p = 2.2 kΩ in the inverting amplifier circuit given in part (b), determine the error in the output voltage if the bias current for the input of the op amp, I_B is 80 nA. [2 marks]

3. For eliminating the errors due to bias current, most modern precision bipolar input-stage based op amplifiers use some means of internal bias current compensation.

a. For a given non-inverting amplifier, prove that the bias currents of the op amp's contribution to the output voltage is: [16 marks]

$$V_o = \left(1 + \frac{R_2}{R_1}\right) R_P I_P + R_2 I_N$$

b. Describe how the testing circuit given below is used to measure the bias current on the given operational amplifier. [12 marks]

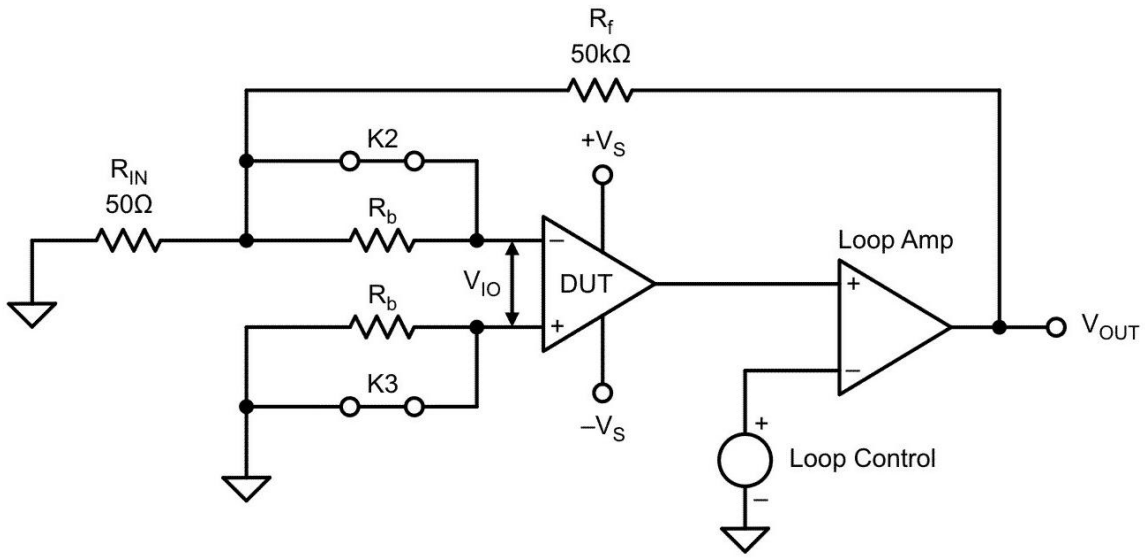

4. The voltage drift in the op amp influences the amount of offset voltage and the accuracy of the voltage at its output. The following table shows the offset and biasing parameters of several op amps.

Op Amp	I_B	I_{OS}	V_{OS}
NE5534	800 nA	10 nA	0.5 mV
LF411	50 pA	25 pA	0.8 mV
LM318	150 nA	30 nA	4 mV
uA741	80 nA	20 nA	1 mV

a. Determine the typical output offset voltage for the circuit of the figure below if R_{off} is 0 Ω. Then determine an optimum size for R_{off} and calculate the new offset. [12 marks]

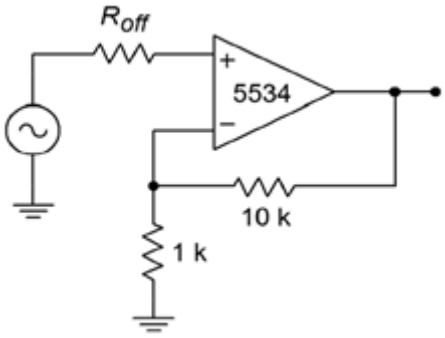

b. The circuit of the figure below is used as part of a transducer-based measurement system. Assuming that the DC input signal is 3 mV, how much uncertainty is there in the output voltage typically? [10 marks]

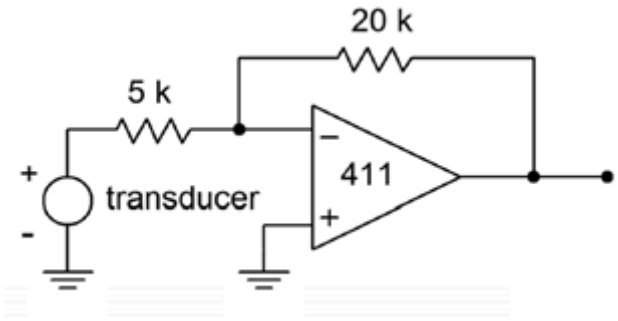

c. Determine the output drift for the circuit of the figure below for a target temperature of 80°C. Assume that R_{off} = 909 Ω and that the circuit has been nulled at 25°C. [6 marks]

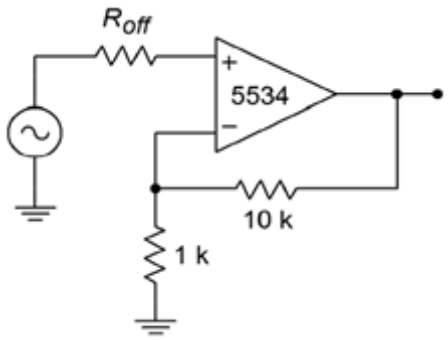

5. CMRR and PSRR are some of the performance measurement parameters of practical op amp. The values of these parameters are typically shown in the manufacturer datasheet of the op amp.

   a. An amplifier has a closed loop voltage gain of 20 dB and a common mode rejection ratio (CMRR) of 90 dB. If a common-mode signal is applied to the input at −60 dBV, what is the output? [4 marks]

   b. An op amp is operated off a power supply that has a peak-to-peak ripple voltage of 0.5 V. If the op amp's power supply rejection ratio (PSRR) is 86 dB, how much of this ripple is seen at the circuit output? [4 marks]

B. Nulling Circuits for Op Amp based Circuits

6. You are required to determine the nulling circuit for inverting amplifier circuit given below (e.g. V_{CC} = +15 V and V_{EE} = -15 V).

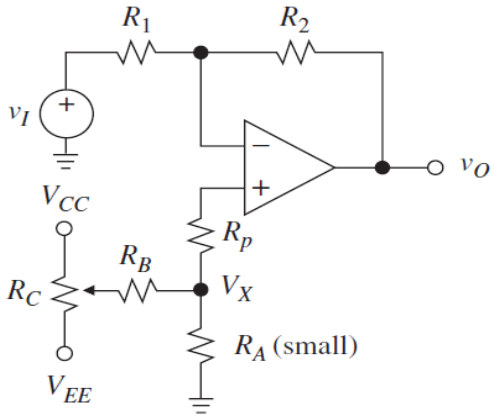

   Note that LM741 op amp is used in this circuit that has DC gain of A_{DC} = 5 V/V and input impedance, Z_{in} = 30 kΩ. For a LM741 op amp, the manufacturer's data sheet shows V_{OS} = 2-6 mV and $I_{OS} \leq$ 200 nA. Find the values of R_1, R_2, R_A, R_B, R_C, and R_P. [24 marks]

7. For LM741 op amp based non-inverting amplifier given below, determine its nulling circuit.

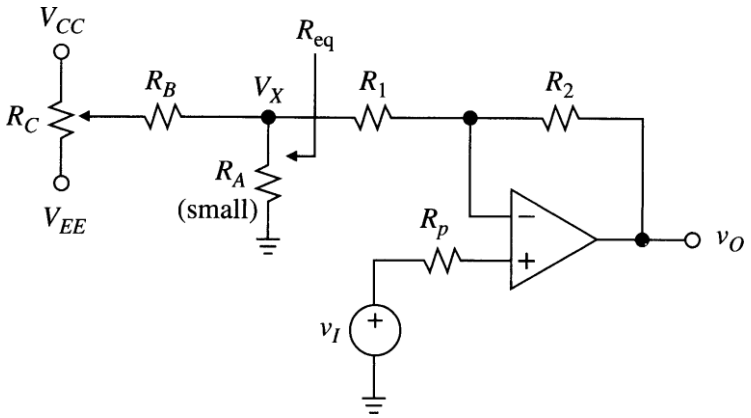

Knowing its DC gain, A_{DC} = 100 V/V and assuming for $\pm$ 15 V rails, find the values of: R_1, R_2, R_A, R_B, R_C, and R_P. [24 marks]

8. Given the following OP37 @ 25°C op-amp based instrumentation amplifier, design its nulling circuit. Knowing A_v = 1 V/mV, I_B = 37 nA, I_{OS} = ±80 nA, V_{OS} = 100 µV and ±15 V power supply rails, find values of R_A, R_B, and R_C. [60 marks]

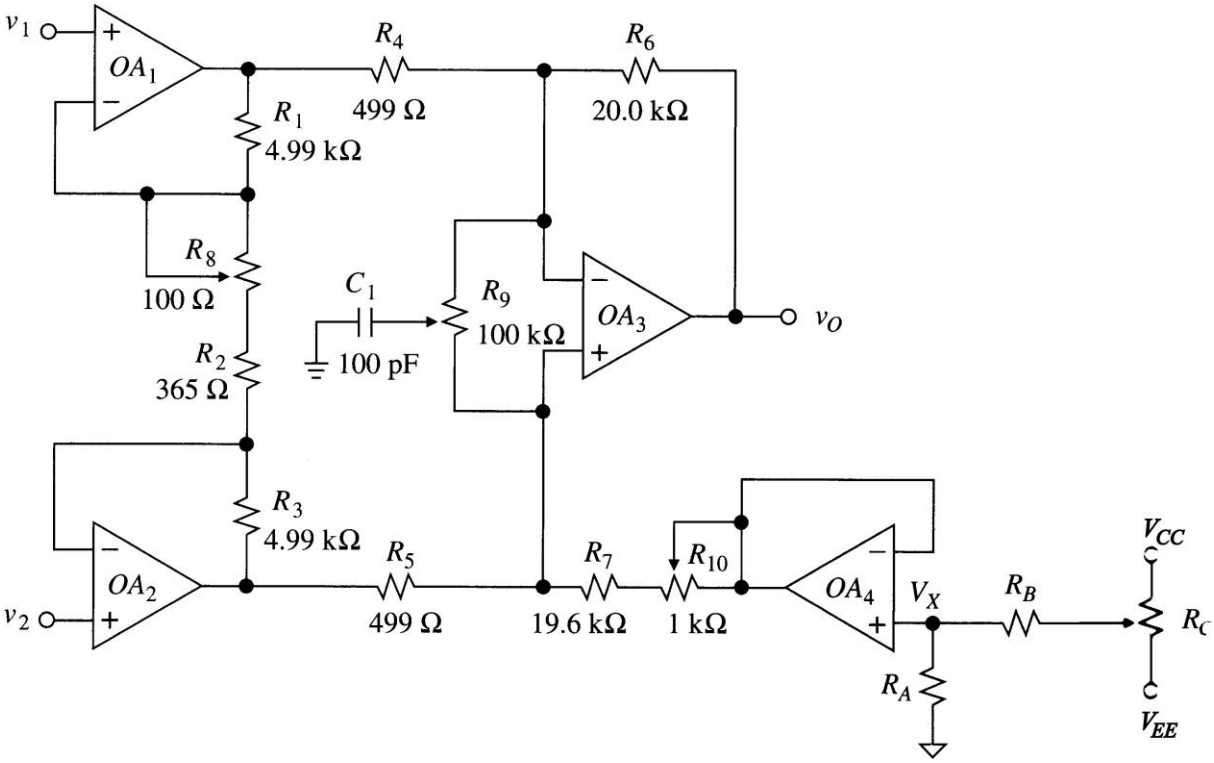

C. Dynamic Limitation of Op Amp

9. Transient performances of op amp show further dynamic limitations of op amp.

   a. Define dynamic limitations of the op amp. Explain how a real op amp has imperfections with its gain, rise time, slew rate and bandwidth. [4 marks]

b. Derive the equation for determining transfer function of a non-inverting amplifier with a finite gain, a as shown below. Calculate the gain of the following non-inverting amplifier if R_1 = 1 kΩ and R_2 = 10 kΩ and open loop gain of the op amp, a = 100. [8 marks]

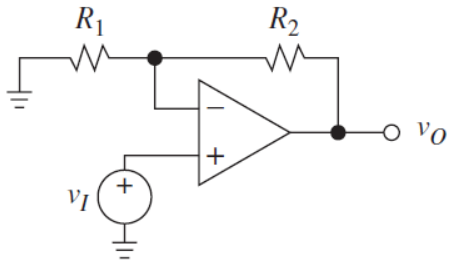

10. Gain bandwidth product of the op amp (GBW) is also referred to as the frequency at which the open loop gain equals one (f_{unity}).

a. Using a uA741 op amp, what is the upper break frequency for a non-inverting amplifier with a gain of 20 dB? [4 marks]

b. Sketch the frequency response of the inverting amplifier circuit in the figure given below. [8 marks]

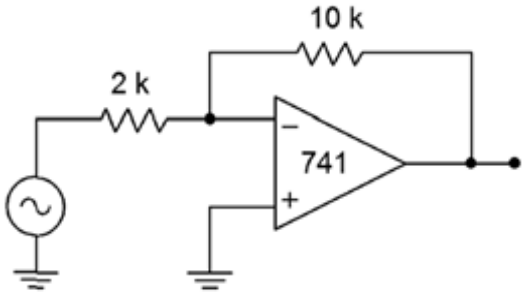

c. Comment on the frequency response of the given amplifier circuit. If a faster op amp is used, how does the frequency response of the amplifier circuit with this op amp differ? [4 marks]

11. By combining two or more wide-bandwidth, low-gain stages, a single high-gain, wide-bandwidth system may be produced.

a. Determine the minimum acceptable f_{unity} for the circuit of the figure below if response should extend to at least 50 kHz. [6 marks]

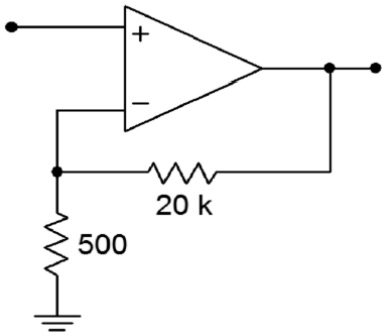

b. Assuming all stages of the amplifier circuit in the figure below use uA741 op amp, what are the system's gain and upper break frequency? [20 marks]

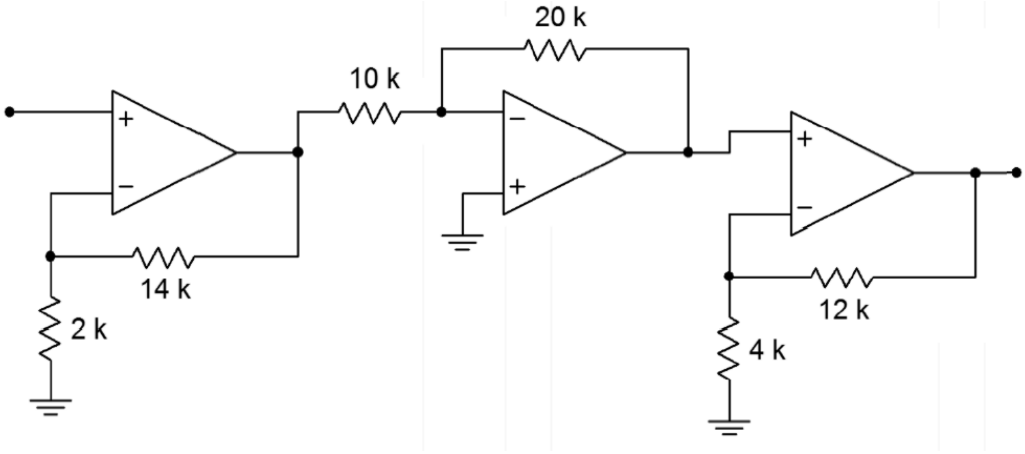

12. The system's gain and upper break frequency of multistage op-amp based amplifier are typically determined from its stages.

    a. A three-stage amplifier uses identical non-inverting voltage stages with gains of 10 each. If the op amps used have an f_{unity} of 4 MHz, what is the system gain and upper break frequency? [4 marks]

    b. Using only LF411 op amp, design a circuit with an upper break frequency of 500 kHz and a gain of 26 dB. [14 marks]

13. For a given electronic circuit based on a generic op amp for audio applications, the open loop gain of the op amp is given as 10^6.

    a. Design amplifier with a gain of 60 dB. [10 marks]

    b. Sketch its magnitude plot. [4 marks]

    c. Find its actual bandwidth. [6 marks]

    The gain plot of the frequency response of the op amp is shown in the figures below.

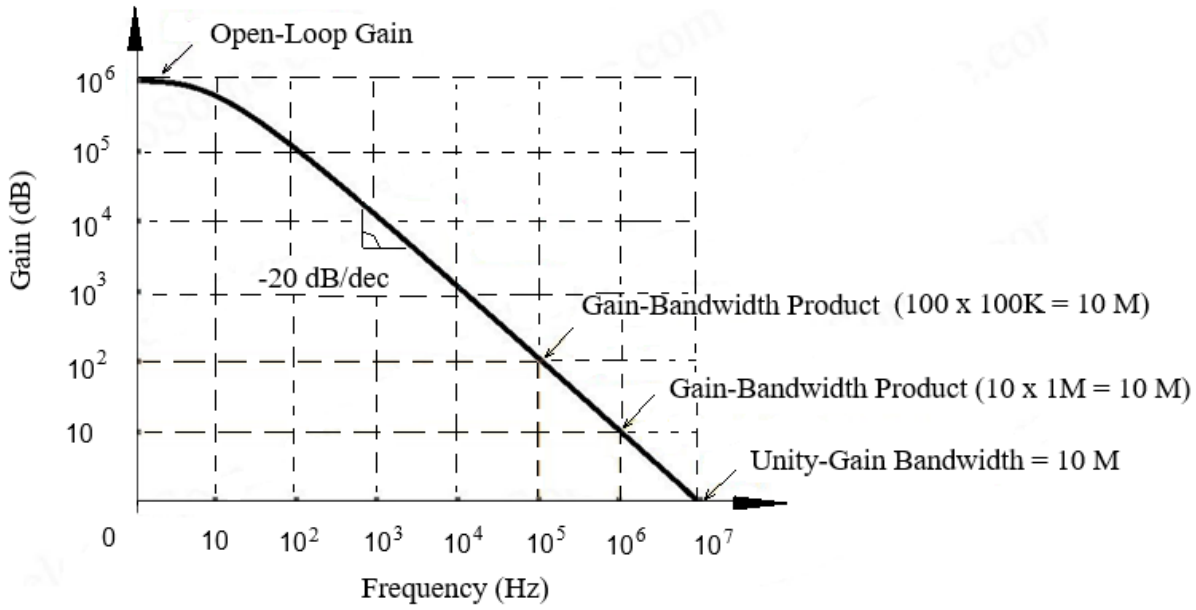

14. Slew rate of the op amp determines not only the transient performance of the op amp, but also its operating bandwidth.

    a. A uA741 op amp is used as part of a motor control system. If the highest reproducible frequency is 3 kHz and the maximum output level is 12 V peak, does slewing ever occur? Is the 741 op amp's power bandwidth at least 3 kHz? [4 marks]

    b. An audio pre-amplifier needs to reproduce signals as high as 20 kHz. The maximum output swing is 10 V peak. What is the minimum acceptable slew rate for the op amp used? [6 marks]

D. Stability of Op Amp

15. Rate of closure of an op amp determines the stability of op-amp based circuit.

    a. Describe rate of closure. State the equation for determining the rate of closure. [4 marks]

    b. Calculate the rate of closure of the following op-amp based amplifier circuit if open-loop gain of the op amp, a at low frequency is 10 and the values of resistors R_1 and R_2 are 1 kΩ and 10 kΩ respectively. [6 marks]

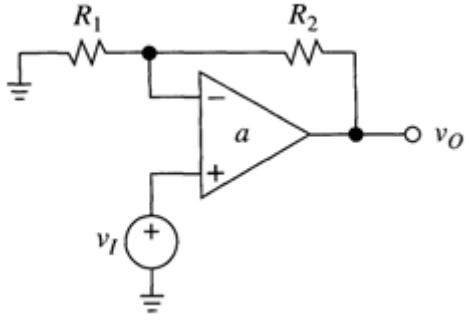

16. For a given multistage three-pole op amp circuit operating under different amounts of feedback, the transfer function of the amplifier is:

$$G(s) = \frac{100 \times 10^3}{\left(1 + \frac{s}{2\pi \times 10^3}\right)\left(1 + \frac{s}{2\pi \times 10^5}\right)\left(1 + \frac{s}{2\pi \times 10^7}\right)}$$

The following graphs outline: the open-loop magnitude and phase plots for the op amp (a) and linearized magnitude plot associating phase with slope (b).

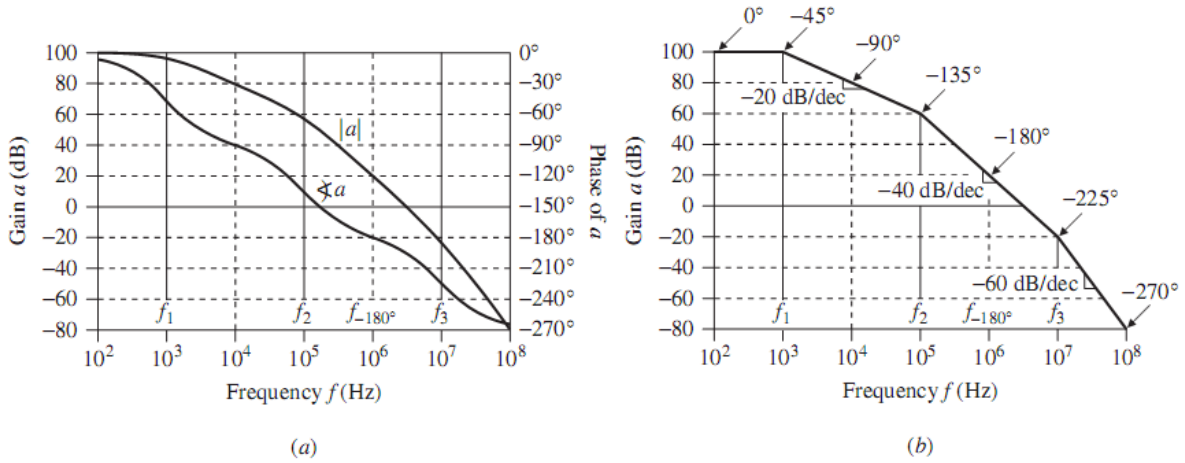

a. What is the minimum allowable noise gain $1/\beta$ if we want to operate the amplifier with a phase margin of 60°? [10 marks]

b. Find discrepancy function $D(jf_x)$ of the circuit feedback system. [6 marks]

c. Comment on the results that you found in (a) and (b). [6 marks]

17. To some extent, depending on the type and characteristics of the op-amp based circuit, compensation could potentially fix the stability problem of a given op amp circuit.

a. Describe different approach for compensating the parasitic capacitance at the input of the op amp circuit for inverting amplifier with non-inverting amplifier. [6 marks]

b. If we apply the pole-zero cancellation approach, calculate the values of components in the compensation circuit for the following op amp circuit with capacitive input. Consider $R_1 = 1\ \text{k}\Omega$, $R_2 = 1\ \text{k}\Omega$, and parasitic capacitance at the input is measured as 1 pF. [14 marks]

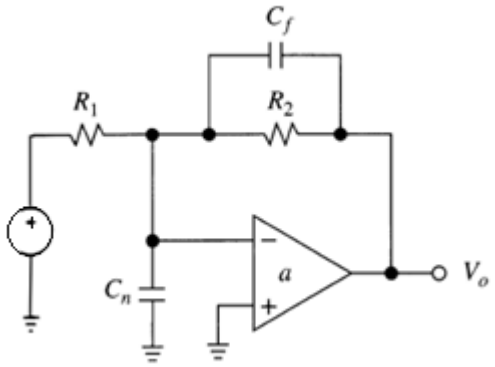

c. Calculate the values of components in the compensation circuit for the following op amp circuit with capacitive output. The op amp used in the circuit is uA741 with its output impedance is typically about 75 Ω from its datasheet. The values of the circuit components are $R_1 = 1\ \text{k}\Omega$, $R_2 = 10\ \text{k}\Omega$ and load capacitance is measured at 1.5 nF. [10 marks]

