XMUT303 Analogue Electronics

Tutorial 3: Op Amp Circuits (Solution)

A. Standard Op Amp Circuit

1. Given that the op amp in the circuit of figure below is ideal. The values of the resistors used in the circuit are:$R_1 = 5\ \text{k}\Omega$, $R_2 = 20\ \text{k}\Omega$, $R_3 = 8\ \text{k}\Omega$, $R_4 = 2\ \text{k}\Omega$, and a load resistor at the output, $R_L = 27\ \text{k}\Omega$. Voltage sources $V_1 = V_a$ and $V_2 = 5\ \text{V}$. The op amp is connected to ± 10 V power supply.

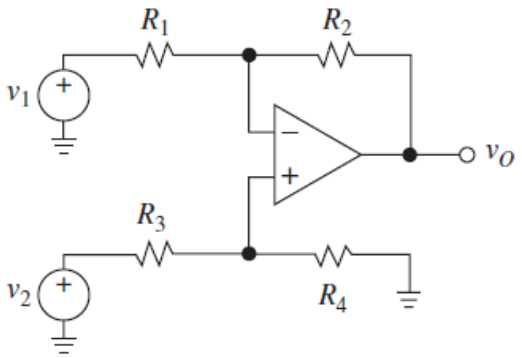

a. Describe what op amp circuit configuration is this? [4 marks]

b. Find an expression for the output voltage V_o in terms of the input voltage V_a across the two inputs of the op amp circuit. [8 marks]

c. Suppose $V_a = 2\ \text{V}$. What value of R_2 will cause the op amp to saturate? [8 marks]

Solution

a. This op amp circuit is a difference amplifier. It is a useful op-amp configuration that amplifies the difference between the input voltages applied.

A differential amplifier is a combination of both inverting and non-inverting amplifiers. It uses a negative feedback connection to control the differential voltage gain.

The differential voltage gain of the amplifier is dependent on the ratio of the input resistances. Therefore, by choosing the input resistances carefully, it is possible to accurately control the gain of the difference amplifier.

The common mode gain of a differential amplifier is ideally zero. But, due to mismatch in the resistor values, there will be a very small common mode output voltage and a finite common mode gain.

By suitably modifying the resistor connections at the input terminals, a difference amplifier can be made to add, subtract and compare the input voltage levels applied.

b. For a given differential amplifier, the equation for the output of the amplifier is found from the following steps.

Top Half:

First, output voltage due to input voltage at inverting input of the op amp (V_n):

$$V_{o1} = -\left(\frac{R_2}{R_1}\right)V_n = -\left(\frac{R_2}{R_1}\right)V_a = -\left(\frac{20\ \text{k}\Omega}{5\ \text{k}\Omega}\right)V_a = -4V_a$$

Bottom Half:

Second, output voltage due to input voltage at non-inverting input of the op amp (V_p):

$$V_{o2} = \left(1+\frac{R_2}{R_1}\right)V_{in+} = \left(1+\frac{R_2}{R_1}\right)\left[\frac{R_4}{(R_3+R_4)}\right](5)$$

$$= \left(1+\frac{20\ \text{k}\Omega}{5\ \text{k}\Omega}\right)\left[\frac{2\ \text{k}\Omega}{(8\ \text{k}\Omega+2\ \text{k}\Omega)}\right](5\ \text{V}) = 5\ \text{V}$$

Overall:

Output voltage of the op amp e.g. knowing that $V_p = V_n$, hence virtual ground:

$$V_o = V_{o1} + V_{o2} = -4V_a + 5$$

As a result, the output voltage V_o in terms of the input voltage V_a is: $V_o = 5 - 4V_a$.

c. Suppose $V_a = 2\ \text{V}$, the value of the feedback resistor (R_2) is found from the following:

$$V_o = \left(1+\frac{R_2}{R_1}\right)\left[\frac{R_4}{(R_3+R_4)}\right](5\ \text{V}) - \left(\frac{R_2}{R_1}\right)V_a = \pm 10$$

Entering the values into the equation:

$$\left(1+\frac{R_2}{5\ \text{k}\Omega}\right)\left[\frac{2\ \text{k}\Omega}{(8\ \text{k}\Omega+2\ \text{k}\Omega)}\right](5\ \text{V}) - \left(\frac{R_2}{5\ \text{k}\Omega}\right)(2\ \text{V}) = \pm 10\ \text{V}$$

As a result, the equation above becomes:

$$1-\frac{R_2}{5\ \text{k}\Omega} = 10 \quad \text{and} \quad 1-\frac{R_2}{5\ \text{k}\Omega} = -10$$

In this case $R_2 = 55\ \text{k}\Omega$ and $R_2 = -45\ \text{k}\Omega$ (this is not possible). So, the value of feedback resistor is $55\ \text{k}\Omega$.

2. For a typical instrumentation amplifier circuit as shown in the figure below:

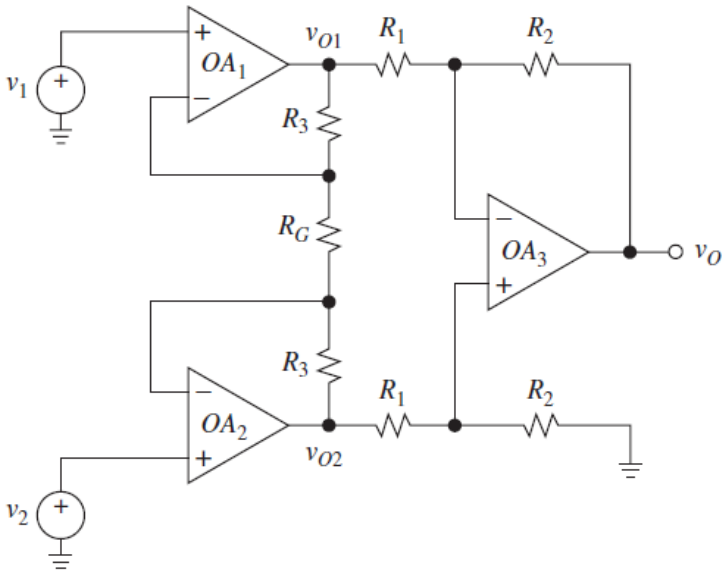

a. What are the characteristics of instrumentation amplifier that makes it different from the difference amplifier? [4 marks]

b. Derive its difference and buffer gains and determine its overall gain. [18 marks]

c. When all resistors in the instrument amplifier is made equal to 10 kΩ and R_G is equal to 2 kΩ, determine the output voltage when the inputs voltages are V_1 = 100 mV and V_2 = 200 mV. [6 marks]

Solution

a. Differences between instrument amplifier and difference amplifier.

First, an instrumentation amplifier allows adjustment of the gain without having to change more than one resistor value i.e. adjustable gain is set by a single resistor. Compare this to the differential amplifier that requires the adjustment of multiple resistor values. The general expression for the overall voltage gain of the instrumentation amplifier is:

$$A_v = 1 + 2\left(\frac{R}{R_G}\right)$$

In this amplifier we can change the differential gain of the instrumentation amplifier simply by changing the value of one resistor: R_G. We could still change the overall gain by changing the values of some of the other resistors, but this would necessitate balanced resistor value changes for the circuit to remain symmetrical.

Note that the lowest gain possible with the above circuit is obtained with R_G completely open (infinite resistance), and that gain value is 1.

Second, compared with the differential amplifier, instrumentation amplifier has the distinct advantages of possessing extremely high input impedances on the $V_1$and V_2 buffer amplifier

inputs (e.g. because in differential amplifier, these inputs connect straight into the non-inverting and inverting inputs of their respective op-amps).

b. The instrumentation amplifier circuit is constructed from a buffered differential amplifier stage with three new resistors linking the two buffer circuits together. Consider all resistors to be of equal value except for R_G.

Input buffer part:

Referring to buffer circuit below, top output voltage v_{o1} is:

$$v_{o1} = v_1\left(\frac{R_G}{R_G + R_3}\right)$$

Bottom output voltage v_{o2} is:

$$v_{o2} = v_2\left(\frac{R_G}{R_G + R_3}\right)$$

Thus,

$$v_{o1} - v_{o2} = (v_1 - v_2)\left(\frac{R_G}{R_G + R_3}\right)$$

Gain of input buffers:

$$A_{\text{buffer}} = 1 + \frac{2R_3}{R_G}$$

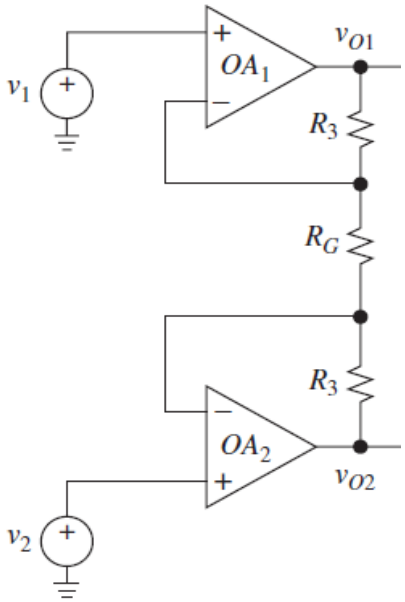

Difference amplifier part:

Referring to difference amplifier circuit below, the output voltage:

$$v_o = \left(\frac{R_2'}{R_1'}\right)\left[\left(\frac{1+\frac{R_1'}{R_2'}}{1+\frac{R_3'}{R_4'}}\right)v_2 - v_1\right]$$

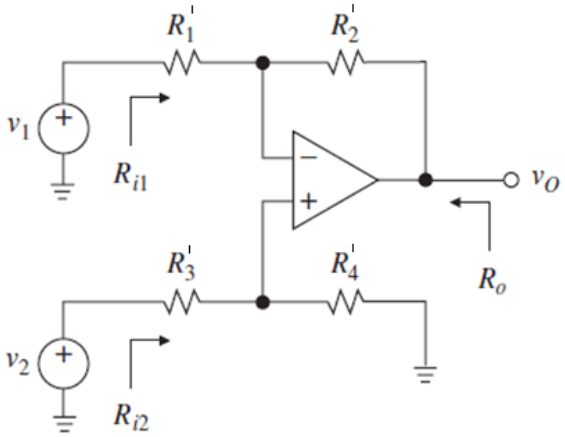

When $R_1' = R_3' = R_1$ and $R_2' = R_4' = R_2$, the output voltage is:

$$v_o = \left(\frac{R_2}{R_1}\right)(v_2 - v_1)$$

Thus, gain of difference amplifier is:

$$A_{\text{difference}} = \frac{R_2}{R_1}$$

Overall gain:

$$A_{\text{overall}} = A_{\text{buffer}} A_{\text{difference}}$$

The output voltage of instrumentation amplifier:

$$v_o = \left(\frac{R_2}{R_1}\right)\left(1 + \frac{2R_3}{R_G}\right)(v_2 - v_1)$$

c. When all resistors in the instrument amplifier is made equal to 10 kΩ and R_G is equal to 2 kΩ, refer to the circuit given in the figure below.

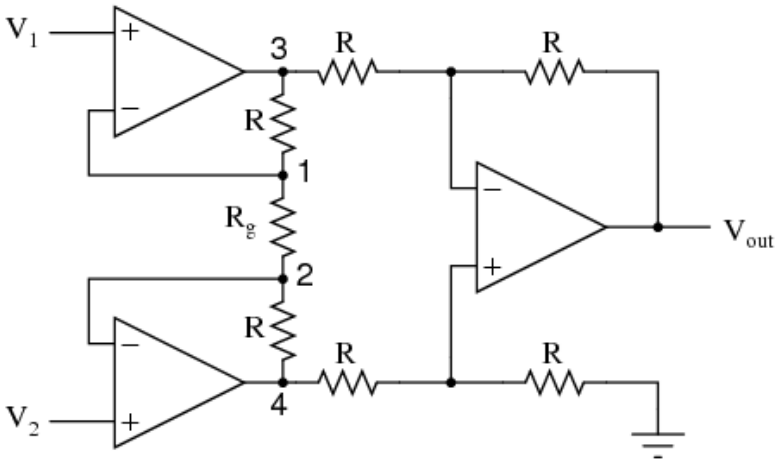

The negative feedback of the upper-left op-amp causes the voltage at point 1 (top of R_G) to be equal to V_1. Likewise, the voltage at point 2 (bottom of R_G) is held to a value equal to V_2. This establishes a voltage drop across R_G equal to the voltage difference between V_1 and V_2. That voltage drop causes a current through R_G, and since the feedback loops of the two-input op-amps draw no current, that same amount of current through R_G must be going through the two "R" resistors above and below it. This produces a voltage drop between points 3 and 4 equal to:

$$V_{3-4} = \left(1 + \frac{2R}{R_G}\right)(V_2 - V_1)$$

The regular differential amplifier on the right-hand side of the circuit then takes this voltage drop between points 3 and 4 and amplifies it by a gain of 1 (assuming again that all "R" resistors are of equal value).

Knowing V_1 = 100 mV and V_2 = 200 mV, the output voltage is given by the following equation:

$$V_{out} = \left(1 + \frac{2R}{R_G}\right)(V_2 - V_1)$$

Put relevant values into the equation, the output voltage of the amplifier is:

$$V_{out} = \left[1 + \frac{2(10\ \text{k}\Omega)}{2\ \text{k}\Omega}\right](200\ \text{mV} - 100\ \text{mV}) = 1.1\ \text{Volts}$$

B. Converter Circuit

3. Unlike the current to voltage converter (I-V converter) circuit, a voltage-to-current converter (V-I converter) circuit as shown below converts voltage to current.

   a. Describe the working mechanism of the given voltage-to-current converter (e.g. it is also known as Howland current source circuit). [4 marks]

   b. Determine the equation that outlines its operation. [4 marks]

c. For input voltage, V_I = 5 V and value of setting resistor (R_3) = 5 kΩ, determine the current that flows in the load resistor. [2 marks]

d. When the value of load resistor is altered, does the current that flows in the load resistor change? [2 marks]

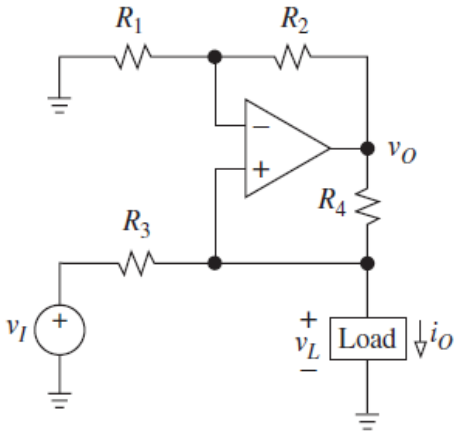

Solution

a. The Howland current source uses an operational amplifier employing both negative and positive feedback. The resistor network at the negative terminal determines the ratio between the voltages at the output and noninverting input terminals.

The feedback resistor to the noninverting input creates positive feedback which causes a negative resistance to be seen from the noninverting node. The negative resistance effectively cancels the resistance from the Norton equivalent current source of V_I and R_3.

In effect the load resistance (R_L) appears to be directly feed by the equivalent input current source (V_I/R_3).

The current through the load resistor is the sum of the currents through R_3 and R_4:

$$i_O = \frac{V_I - V_L}{R_3} + \frac{V_O - V_L}{R_4} \qquad (Eq.1)$$

The voltage at the output of the op amp is:

$$V_O = V_L\left(1 + \frac{R_2}{R_1}\right)$$

Substitute equation (2) into (1), thus:

$$i_O = \frac{V_I}{R_3} + V_L\left(\frac{R_2}{R_4 R1} - \frac{R_4}{R_3 R_4}\right)$$

If R_{in} is the input impedance of the circuit, the equation above becomes:

$$i_O = \frac{V_I}{R_3} + \frac{V_L}{R_{in}} \qquad \text{and} \qquad R_{in} = \frac{R_4}{\left(\frac{R_2}{R_1}\right) - \left(\frac{R_4}{R_3}\right)}$$

If we make ratio of R_2/R_1 to be equal to R_4/R_3 by making all resistor equal, $R_{in} = \infty$:

$$i_O \cong \frac{V_I}{R_3}$$

b. By referring to the Howland current source as shown above, make the values of all resistors to be equal to 5 kΩ.

In this circuit, V_I is the input voltage, R_3 is the setting resistor, and load is a load resistor. The output current that flows in the load resistor is simply:

$$i_O = \frac{V_I}{R_3}$$

This means that the output current is independent from the resistance of the load.

c. By referring to the circuit shown, the current that flows in the load resistor is:

$$i_O = \frac{V_I}{R_3} = \frac{5\ \text{V}}{5\ \text{k}\Omega} = 1\ \text{mA}$$

d. When the circuit is running in interactive mode, the value of load resistor can be altered, the output current should be essentially the same e.g. this is a principle of current pump circuit.

4. Depending on the design specification, any signal or waveform conversion operations can be performed with operational amplifiers circuits.

a. Using two op amps, design a circuit that can perform subtraction operation of two signals. [6 marks]

b. Some electronic devices e.g. tunnel diodes, triodes, thyristors, and so forth, have negative differential resistance characteristics. It is important that you could design op amp-based circuit that could deal with these types of devices. Design an op-amp based circuit that performs negative impedance converter with current inversion. [8 marks]

Solution

a. Subtraction can be performed with summation and inversion operation for one of the circuit inputs. So, to achieve the requirements, a summing amplifier and an inverter amplifier are needed to realise subtraction. The following diagram shows a subtraction circuit.

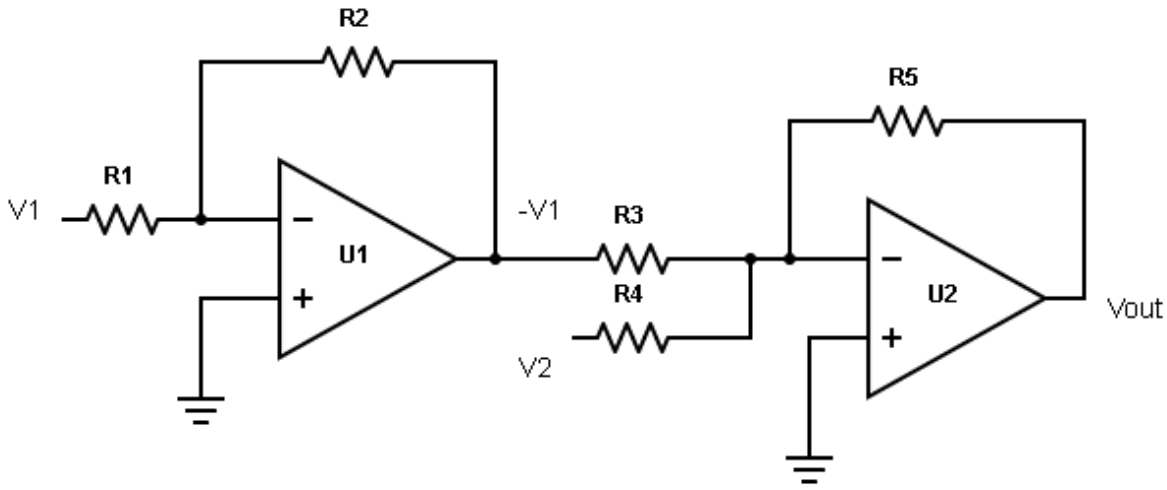

As we can see, this circuit will provide an output voltage that is equal to the difference between V_1 and V_2. The voltage V_1 is applied to a standard inverting amplifier that has unity gain ($R_1 = R_2$). Because of this, the output from the inverting amplifier will be equal to $-V_1$.

This output is then applied to the summing amplifier, also having unity gain ($R_3 = R_5$) along with V_2.

Thus, output from second op-amp is given by:

$$V_{out} = -(V_A + V_B) = -(-V_1 + V_2) = V_1 - V_2$$

The gain of the second stage in the subtractor can be varied to provide an output that is proportional to the difference between the input voltages.

b. For an op amp based negative impedance converter with current inversion circuit, it is a non-inverting amplifier (e.g. the op-amp and the voltage divider R_1 and R_2 on the figure below) with a resistor (R_3) connected between its output and input.

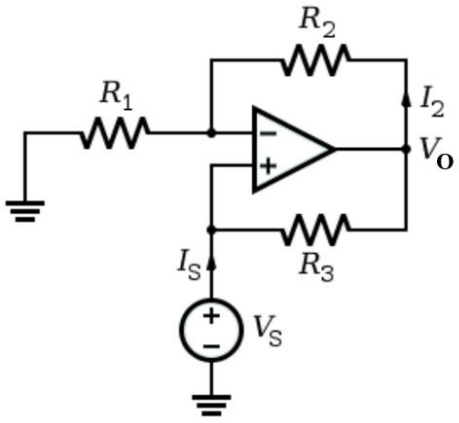

Referring to the circuit given above, the op-amp's output voltage is:

$$V_{out} = V_s\left(1 + \frac{R_2}{R_1}\right) \quad (Eq.1)$$

The current going from the operational amplifier output through resistor R_3 toward the source V_s is $-I_s$, and

$$-I_s = \frac{V_{out} - V_s}{R_3} \qquad (Eq.2)$$

Substituting equations Eq.1 to Eq. 2 yields:

$$-I_s = V_s \left[\frac{\left(\frac{R_2}{R_1}\right)}{R_3} \right]$$

So, the input V_s experiences an opposing current $-I_s$ that is proportional to V_s, and the circuit acts like a resistor with negative resistance.

$$R_{in} = \frac{V_s}{I_s} = -R_3 \left(\frac{R_1}{R_2}\right)$$

In general, elements R_1, R_2, and R_3 need not be pure resistances (i.e., they may be capacitors, inductors, or impedance networks).

C. Rectifier Circuit

5. In the figure below is a precision half-wave rectifier circuit. It consists of non-inverting amplifier with diode D_1 in the feedback loop of an op-amp.

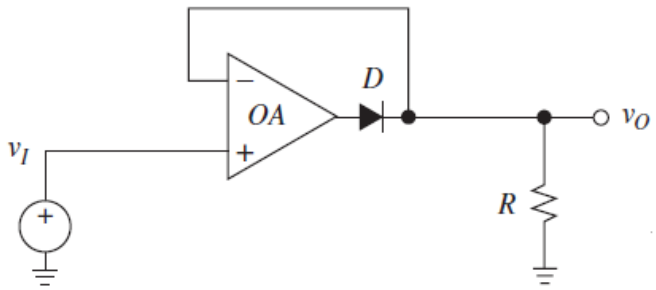

a. Describe why the op-amp based rectifier circuit provides a more precise rectification compared with diode-based rectifier circuit. [4 marks]

b. Describe the operation of the given circuit. The analysis of this circuit can be done considering two distinct cases of $V_i > 0$ V and $V_i < 0$ V. [8 marks]

c. Draw the waveform of the input and output of the circuit and also the output voltage-input voltage transfer function graph of its operation. [4 marks]

Solution

a. In a typical diode-based rectifier circuit, we use diodes to rectify AC to DC. But this rectification method can only be used if the input voltage to the circuit is greater than the forward voltage of the diode which is typically 0.7 V.

To overcome this issue, the precision rectifier circuit was introduced e.g. it is another rectifier that converts AC to DC, but in a precision rectifier we use an op-amp to compensate for the voltage drop across the diode. That is why we are not losing the 0.6 V or 0.7 V voltage drop across the diode. Also, the circuit can be constructed to have some gain at the output of the amplifier as well.

b. Description of operation of precision half-wave rectifier circuit.

Case 1: $V_i > 0$ V

For closed loop feedback op-amp $V_p = V_n$, due to virtual ground, when $V_i > 0$ V, op-amp tries to keep $V_o = V_n = V_p = V_i$. It does this because forward biasing diode provides closed loop feedback path.

The voltage drop across forward bias diode $V_d(on)$ = 0.7 V. To accommodate the voltage drop across diode, the op-amp swings about 0.7 V higher than V_o.

Case 2: $V_i < 0$ V

When $V_i < 0$ V, diode D_1 is reverse biased and the op-amp is working in the open loop. Therefore, op-amp is no longer capable of keeping $V_n = V_p$.

With no current through resistance R, we have $V_o = 0$. The op-amp output V_o is saturated at V_{sat} .

c. The input and output waveforms of the precision half-wave rectifier circuit and its quadrant of operation are given in the figures below.

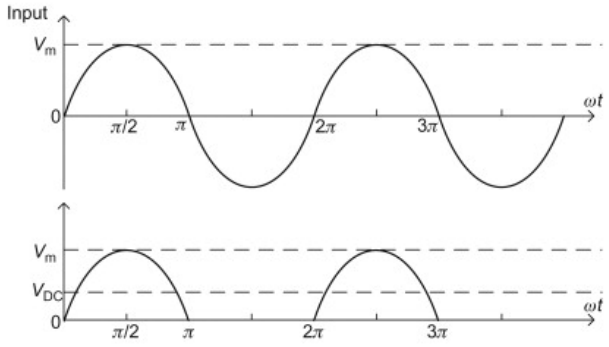

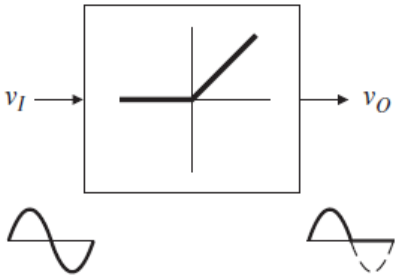

6. Given in the figure below is a full-wave precision rectifier circuit. Notice the values of resistors $R_x = R_1 \parallel R_f$ and $R_y = R_2 \parallel R_3 \parallel R_4$ given in the circuit.

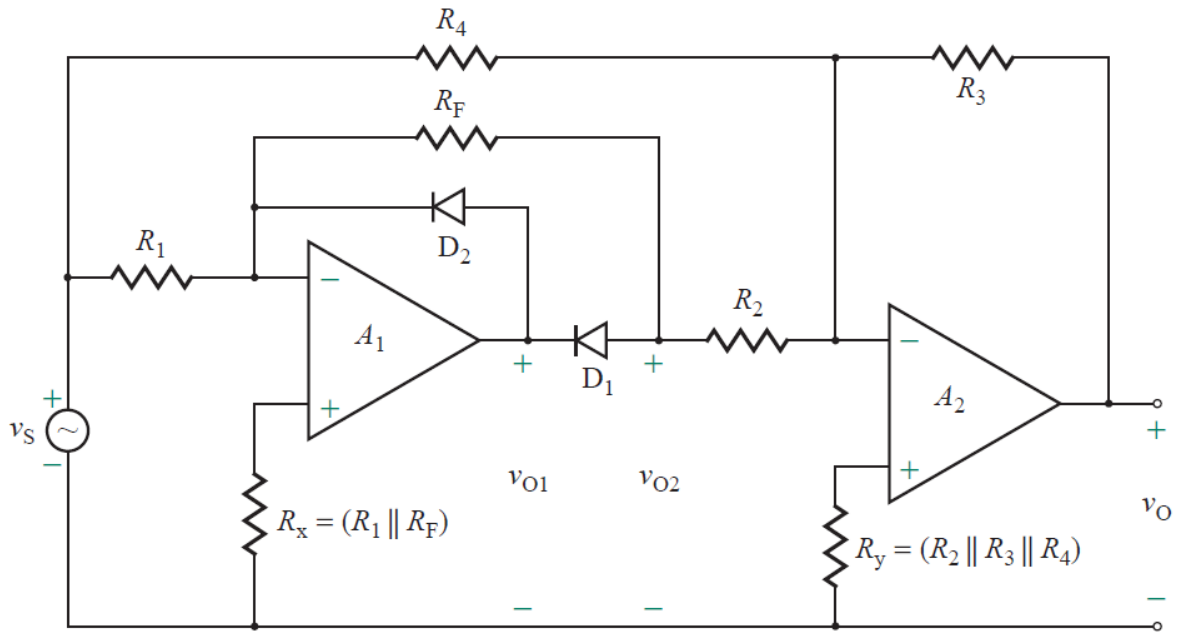

Describe the operation of the circuit and derive the equation for a special case of $R_1 = R_2 = R_F = R$ and $R_3 = R_4 = 2R$ and use a sinusoidal input voltage $v_S = V_m \sin \omega t$. Illustrate your answer with graph of the waveforms involved in the circuit. [12 marks]

Solution

We will divide the circuit operation into two intervals, interval 1 and interval 2.

During interval 1, $0 \leq t \leq \pi$.

The voltage v_S is positive, and $v_{O2} = -v_S$. The voltage at the output of the second op-amp can be found from:

$$v_O = -\left[\left(\frac{R_3}{R_2}\right) v_{O2} + \left(\frac{R_3}{R_4}\right) v_s\right]$$

which, for $R_3 = R_4 = 2R$ and $R_2 = R$, becomes:

$$v_O = -2v_{O2} - v_s = -2(-v_s) - v_s = v_s \quad (\text{for } v_s \geq 0)$$

During interval 2, $\pi \leq t \leq 2\pi$.

The voltage v_S is negative, and $v_{O2} = 0$. The voltage at the output of the second op-amp can be found from:

$$v_O = -\left[\left(\frac{R_3}{R_2}\right) v_{O2} + \left(\frac{R_3}{R_4}\right) v_s\right]$$

which, for $R_3 = R_4 = 2R$ and $R_2 = R$, becomes:

$$v_O = -2v_{O2} - v_s = (-2)(0) - v_s = -v_s \quad (\text{for } v_s < 0)$$

Thus, the output voltage is the inverted version of the input voltage, as shown in the figure below.

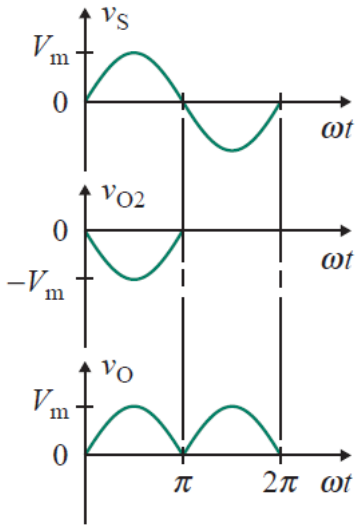

D. Comparator Circuit

7. In the circuit of figure given below let V_{REF} = 2.0 V, R_1 = 20 kΩ, and R_2 = 30 kΩ.

   a. Determine the value of input voltage (V_I) that will turn on the LED. [6 marks]

   b. Assuming a LM339 comparator with V_{OS} = 5 mV (maximum) and I_B = 250 nA (maximum) e.g. values from its datasheet, estimate the worst-case error of your circuit. [10 marks]

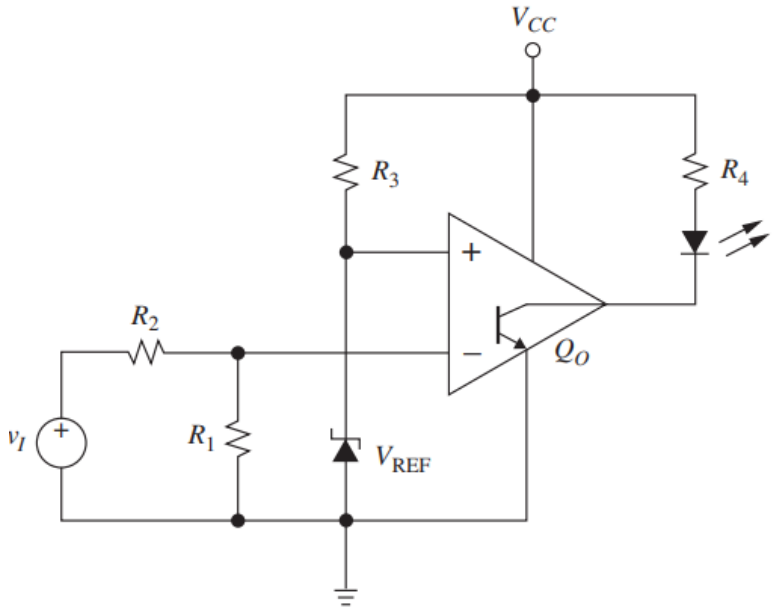

Solution

a. The value of input voltage (V_I) that will turn on the LED is found as follows. Knowing that virtual zero at op amp inputs (V_p and V_n):

$$V_p = V_n$$

The output voltage when the comparator is about to trip is found from the following equation

$$V_I\left(\frac{R_1}{R_1+R_2}\right)=V_{\text{REF}}$$

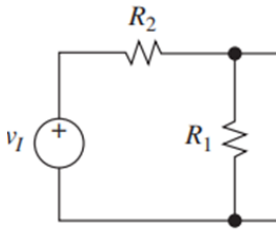

Rearranging the equation given above:

$$V_I=\left(\frac{R_1+R_2}{R_1}\right)V_{\text{REF}}$$

Put the relevant values into the above equation, the input voltage is:

$$V_I=\left(\frac{20\ \text{k}\Omega+30\ \text{k}\Omega}{20\ \text{k}\Omega}\right)(2\ \text{V})=5\ \text{V}$$

b. In this circuit, I_P has no effect because $R_p \cong 0$, so the bias current (I_B) does not determine the error of this input of the comparator.

Since I_N flows out of the comparator, it raises the inverting-input voltage by:

$$V_{B(I_N)}=(R_1 \parallel R_2)I_N=\left[\frac{(20\ \text{k}\Omega)(30\ \text{k}\Omega)}{20\ \text{k}\Omega+30\ \text{k}\Omega}\right]250\ \text{nA}=3\ \text{mV}$$

This the maximum value e.g. when the comparator is about to trip.

The worst-case scenario occurs when V_{OS} adds in the same direction, for a net inverting-input rise of:

$$V_{OS}+(R_1 \parallel R_2)I_N=5\ \text{mV}+3\ \text{mV}=8\ \text{mV (maximum)}$$

This has the same effect as an 8-mV drop in V_{REF}, giving:

$$V_o=\left(1+\frac{30\ \text{k}\Omega}{20\ \text{k}\Omega}\right)(2-0.008)=4.98\ \text{V}$$

So, this is the value of output voltage in the circuit, instead of $V_o=5.00\ \text{V}$

8. Referring to the on-off temperature controller circuit of figure given below, specify suitable resistances so that the set point can be adjusted anywhere between 50°C and 100°C by means of a 5 kΩ potentiometer. From datasheet of LM335, its temperature coefficient is given as 10 mV/°K (note: that for temperature conversion 0°K = 273.2°C). [10 marks]

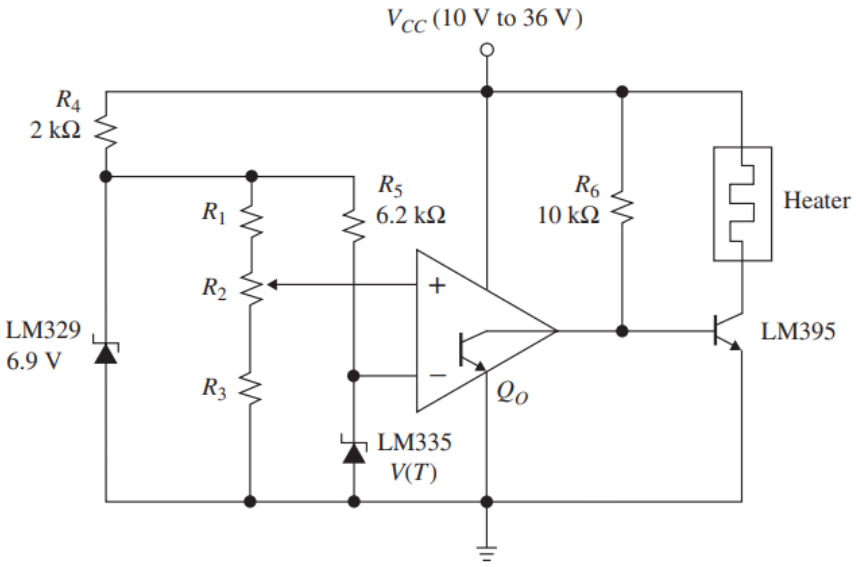

Solution

Voltage at 50° C is:

$$V_{(50^\circ\,\mathrm{C})} = \frac{273.2^\circ + 50^\circ}{100^\circ} = 3.232\ \mathrm{V}$$

Voltage at 100° C is:

$$V_{(100^\circ\,\mathrm{C})} = \frac{273.2^\circ + 100^\circ}{100^\circ} = 3.732\ \mathrm{V}$$

Since the value R_2 is equal to 5 kΩ, the current that flows through R_2 is:

$$I_2 = \frac{3.732\ \mathrm{V} - 3.232\ \mathrm{V}}{5\ \mathrm{k\Omega}} = 0.1\ \mathrm{mA}$$

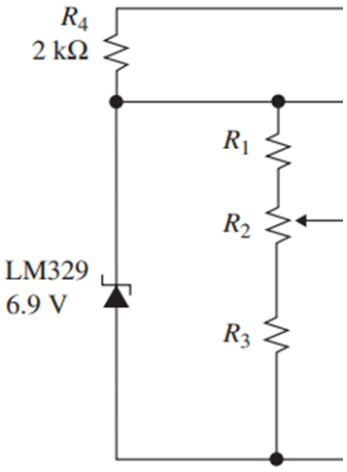

Consequently, the value of resistor R_3 is:

$$R_3 = \frac{3.232\ \mathrm{V}}{0.1\ \mathrm{mA}} = 32.3\ \mathrm{k\Omega}\ (\mathrm{e.g.\ use}\ 32.4\ \mathrm{k\Omega}, 1\%)$$

The value of resistor R_1 is:

$$R_1 = \frac{6.9\ \text{V} - 3.732\ \text{V}}{0.1\ \text{mA}} = 31.7\ \text{k}\Omega\ (\text{e.g. use } 31.6\ \text{k}\Omega, 1\%)$$

9. Given in the figure below is a typical Schmitt trigger circuit along with its voltage transfer characteristic graph.

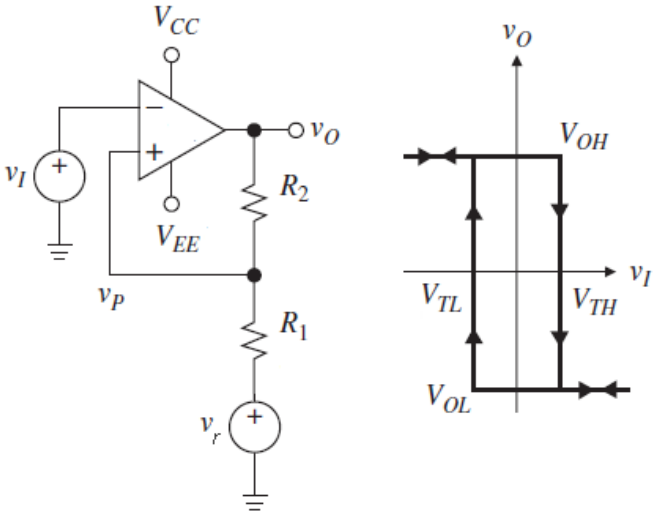

a. Describe the role of hysteresis in the circuit. [4 marks]

b. Describe the operation of the given circuit. [4 marks]

c. Specify suitable resistances of the resistors (R_1 and R_2) and reference voltage (V_r) for V_{TL} = 2 V and V_{TH} = 3 V. Given that output voltage saturated to the supply voltage $= \pm 10$ V. [30 marks]

Solution

a. Hysteresis is applied by feeding back to the positive input a small fraction of the output voltage (which is at an upper or a lower limit). This voltage adds a polarity-sensitive offset to the input, increasing the threshold range.

Hysteresis can be applied by connecting the positive input terminal of the op amp to the tap of a two-resistor voltage divider between the positive output and the reference source.

The amount of output voltage fed back depends on the resistance ratio. This frees the amplifier for dealing with the amplification of the input signal.

b. Referring to the given Schmitt trigger circuit along with its transfer characteristic, as the input voltage increases, it reaches a threshold voltage (e.g. the high threshold point V_{TH}) at which the output voltage goes to negative saturation.

As the input voltage decreases it reaches another threshold voltage (e.g. the lower threshold point V_{TL}) at which the output voltage goes to positive saturation.

With the voltage difference between V_{TH} and V_{TL} larger than the noise, the output remains stable (i.e. avoids noise triggered oscillation around V_r).

c. By considering that V_{TL} = 2 V and V_{TH} = 3 V for the given Schmitt trigger, use a reference voltage source V_r to make polarity of V_{TL} and V_{TH} same (note: for V_{TL} and V_{TH} with opposite polarity, there is no need of V_r).

V_{sat} = 10 V and therefore $V_{out} = \pm 10$ V

Use superposition theorem to create the following equations:

For the high threshold point (V_{TH}):

$$V_{TH} = V_{sat}\left(\frac{R_1}{R_1 + R_2}\right) + V_r\left(\frac{R_2}{R_1 + R_2}\right)$$

For the lower threshold point (V_{TL}):

$$V_{TL} = -V_{sat}\left(\frac{R_1}{R_1 + R_2}\right) + V_r\left(\frac{R_2}{R_1 + R_2}\right)$$

Choose R_2 = 22 kΩ and solve the above equations for R_1 and V_r, we get the following equations for the given Schmitt trigger circuit:

Equation for high threshold point (V_{TH}):

$$\frac{10R_1}{R_1 + 22\,\text{k}\Omega} + \frac{V_r(22\,\text{k}\Omega)}{R_1 + 22\,\text{k}\Omega} = 3$$

Solving the above equation

$$10R_1 + V_r(22\,\text{k}\Omega) = 3(R_1 + 22\,\text{k}\Omega)$$

So, the equation for the V_{TH} is:

$$7R_1 + V_r(22\,\text{k}\Omega) = 66\,\text{k}\Omega \qquad (Eq.1)$$

Equation for low threshold point (V_{TL}):

$$\frac{-10R_1}{R_1 + 22\,\text{k}\Omega} + \frac{V_r(22\,\text{k}\Omega)}{R_1 + 22\,\text{k}\Omega} = 2$$

Solving the above equation

$$-10R_1 + V_r(22\,\text{k}\Omega) = 2(R_1 + 22\,\text{k}\Omega)$$

So, the equation for the V_{TL} is:

$$-12R_1 + V_r(22\,\text{k}\Omega) = 44\,\text{k}\Omega \qquad (Eq.2)$$

Solving the equations Eq.1 and Eq.2, we can find the value for R_1

$$7R_1 + V_r(22\,\text{k}\Omega) = 66\,\text{k}\Omega$$

$$-12R_1 + V_r(22\,\text{k}\Omega) = 44\,\text{k}\Omega$$

Subtracting the top part with the second part in the bottom, this yields the value of R_1

$$7R_1 - (-12R_1) = 66\,\text{k}\Omega - 44\,\text{k}\Omega$$

Thus

$$R_1 = \frac{22\ \text{k}\Omega}{19} = 1.15\ \text{k}\Omega$$

For R_1= 1.15 kΩ (e.g. choose standard value of 1.2 kΩ).

And the value of reference voltage, V_r is determined as follow

$$V_r = \frac{[66\ \text{k}\Omega - 7(1.15\ \text{k}\Omega)]}{22\ \text{k}\Omega}$$

As a result, the reference voltage, V_r = 2.6 V.

The figures given below show the circuit diagram of designed Schmitt trigger circuit and its waveforms.

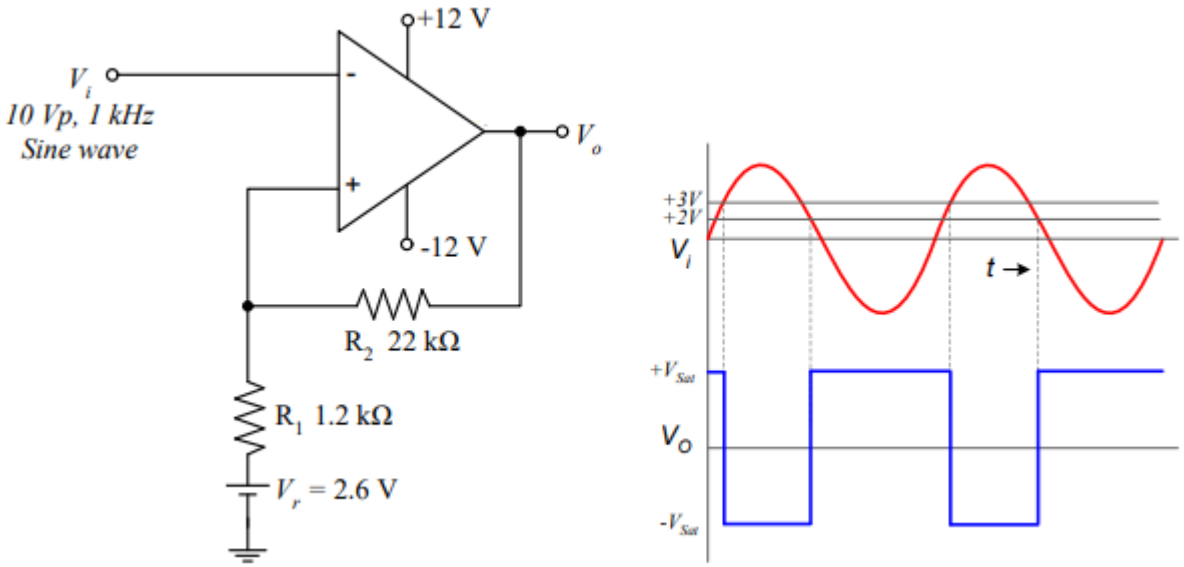

E. Oscillator Circuit

10. For a given Wien-Bridge oscillator circuit as shown below.

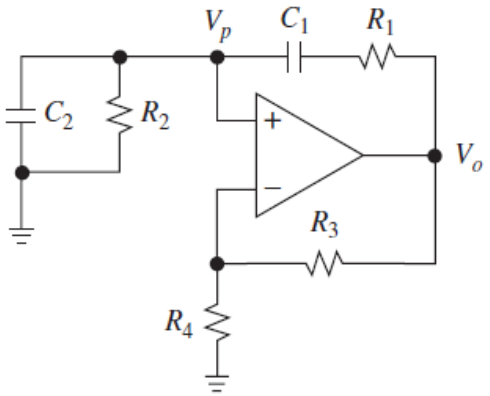

a. Prove that the feedback gain (β) equation that governs the operation of the circuit is as shown below for $R_1 = R_2 = R$ and $C_1 = C_2 = C$. [10 marks]

$$\beta = \frac{V_p(s)}{V_o(s)} = \left(\frac{sRC}{s^2R^2C^2 + 3sRC + 1}\right)$$

b. Derive the expression of the resistors R_3 and R_4 in the circuit that would meet the required constant oscillation condition of the oscillator. [20 marks]

c. Determine the values of the components of the oscillator circuit when frequency of the oscillator f = 1 kHz and if the value of the capacitor is assumed to be 10 pF. [8 marks]

Solution

a. Derivation of equation of the oscillator circuit is performed by considering the feedback circuit shown in the figure below. By applying voltage divider rule, the voltage of the RC network e.g. V_p is found from:

$$V_p(s) = V_o(s)\left(\frac{Z_2(s)}{Z_1(s) + Z_2(s)}\right)$$

Where:

$$Z_1(s) = R_1 + \frac{1}{sC_1} \qquad Z_2 = R_2 \parallel \frac{1}{sC_2} = \frac{R_2}{1 + sC_2R_2}$$

The two RC Networks must (may) have equal resistors and capacitors e.g. $R_1 = R_2 = R$ and $C_1 = C_2 = C$.

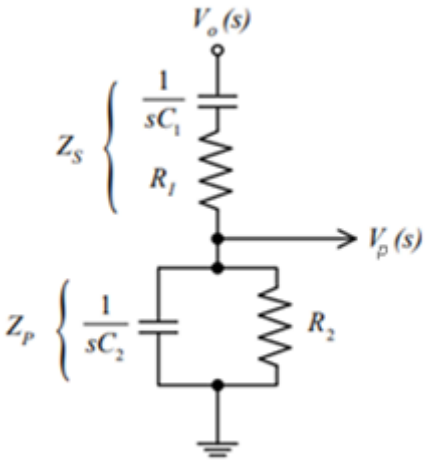

Feedback gain of the circuit (β) is found from the following

$$\beta = \frac{V_p(s)}{V_o(s)} = \left(\frac{Z_2(s)}{Z_1(s) + Z_2(s)}\right) = \frac{\left(\frac{R_2}{1 + sC_2R_2}\right)}{\left(R_1 + \frac{1}{sC_1}\right) + \left(\frac{R_2}{1 + sC_2R_2}\right)}$$

So, rearranging the equation above, the feedback gain of the circuit is:

$$\beta = \left(\frac{sRC}{s^2R^2C^2 + 3sRC + 1}\right) \qquad (Eq.1)$$

b. Since the op amp is operated in the non-inverting configuration, the voltage gain is:

$$A_v = \frac{V_o(s)}{V_p(s)} = 1 + \frac{R_3}{R_4} \qquad (Eq.2)$$

Applying the condition for sustained oscillation e.g. $A_v\beta = 1$. Multiplying Eq.1 with Eq. 2, we get:

$$A_v\beta = \left(1 + \frac{R_3}{R_4}\right)\left(\frac{sRC}{s^2R^2C^2 + 3sRC + 1}\right) = 1$$

Substitute s with $j\omega$, the equation above becomes:

$$\left(1 + \frac{R_3}{R_4}\right)j\omega RC = -R^2C^2\omega^2 + 3j\omega RC + 1$$

Simplify the above equation

$$j\omega\left[\left(1 + \frac{R_3}{R_4}\right)RC - 3RC\right] = 1 - R^2C^2\omega^2$$

To obtain the frequency of the oscillation, equate the real part to zero:

$$1 - R^2C^2\omega^2 = 0$$

The frequency of the oscillation is:

$$\omega = \frac{1}{RC} \quad \text{or} \quad f = \frac{1}{2\pi RC}$$

To obtain the condition for gain at the frequency of oscillation, equate the imaginary part to zero:

$$j\omega\left[\left(1 + \frac{R_3}{R_4}\right)RC - 3RC\right] = 0$$

Rearranging the equation above:

$$\left(1 + \frac{R_3}{R_4}\right)RC = 3j\omega RC$$

Then, the gain of the amplifier is:

$$1 + \left(\frac{R_3}{R_4}\right) = 3 \quad \text{or} \quad \frac{R_3}{R_4} = 2$$

Therefore, the values of the resistor $R_3 = 2R_4$ to meet the required condition of the oscillator.

c. The values of the components when frequency of the oscillator f = 1 kHz and if the value of the capacitor is assumed to be 10 pF.

Frequency of the oscillation is determined from the following equation for the Wien-Bridge oscillator:

$$f = \frac{1}{2\pi RC}$$

Given that frequency of oscillation, f is 1 kHz and C = 10 pF, entering the values into the equation above.

$$1000 = \frac{1}{2\pi R(10 \times 10^{-9})}$$

As a result, R = 15.9 kΩ, then assign $R_1 = R_2 = 15\ \text{k}\Omega$ (e.g. to the nearest standard value).

Also, since $R_3/R_4 = 2$, so let $R_4 = 1\ \text{k}\Omega$ and $R_3 = 2\ \text{k}\Omega$ (e.g. use 4.7 kΩ potentiometer for fine corrections).

11. The figure below shows a phase-shift oscillator circuit. Notice that the feedback network consists of three RC circuits with identical component values and resistor $R_{OM} = R_1 \parallel R_F$.

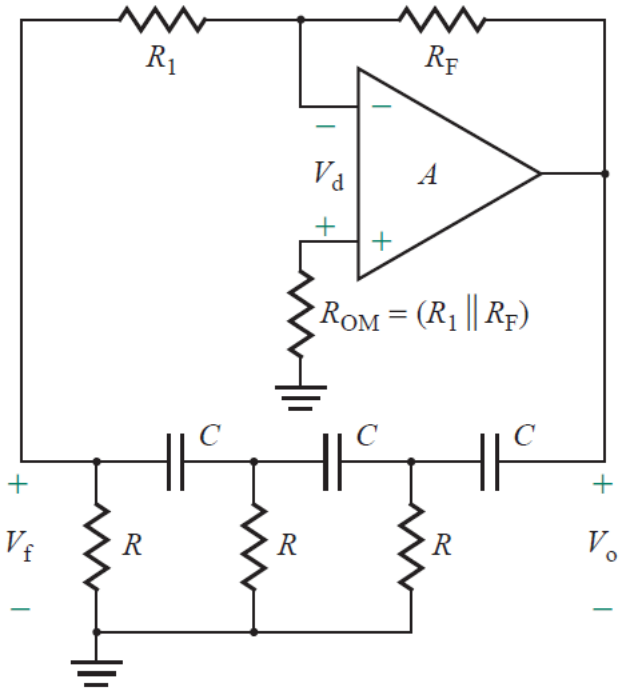

a. Prove that the transfer function of the feedback network is given by: [12 marks]

$$\beta(s) = \frac{V_f(s)}{V_o(s)} = -\frac{R_F}{R_1}\left(\frac{R^3C^3s^3}{R^3C^3s^3 + 6R^2C^2s^2 + 5RCs + 1}\right)$$

b. Derive the closed-loop voltage gain of the op-amp circuit (R_F/R_1). [12 marks]

Solution

a. The equivalent circuit of the feedback network in the oscillator circuit is as shown in the figure below.

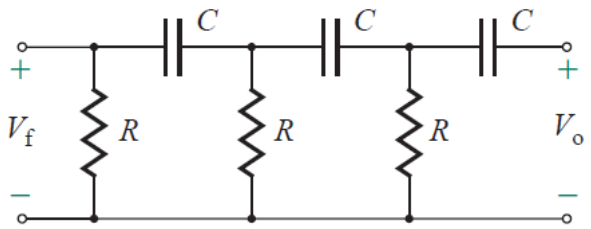

Treating the network circuit as consisting of three identical RC parts with the same values of the RC components,

$$A_{RC} = \frac{v_O(s)}{v_I(s)} = \frac{R + (1/sC)}{R}$$

As a result,

$$\beta(s) = \frac{V_f(s)}{V_o(s)} = -\frac{R_F}{R_1}\left[\frac{R + (1/sC)}{R}\right]\left[\frac{R + (1/sC)}{R}\right]\left[\frac{R + (1/sC)}{R}\right]$$

Thus, the transfer function equation for the feedback network circuit is:

$$\beta(s) = -\frac{R_F}{R_1}\left(\frac{R^3C^3s^3}{R^3C^3s^3 + 6R^2C^2s^2 + 5RCs + 1}\right)$$

b. Since $A\beta = 1$ for a phase-shift oscillator, from the equation derived in the part (a), we get:

$$-\frac{R_F}{R_1}\left(\frac{R^3C^3s^3}{R^3C^3s^3 + 6R^2C^2s^2 + 5RCs + 1}\right) = 1 \qquad (Eq.1)$$

Substituting $s = j\omega$ into the equation above and cancelling the elements in the denominator, we get:

$$-R_F(-jR^3C^3\omega^3) = R_1(-jR^3C^3\omega^3 - 6R^2C^2\omega^2 + j5RC\omega + 1)$$

Equating the real parts to zero, we get:

$$R_1(-6R^2C^2\omega^2 + 1) = 0$$

This gives the oscillation frequency ω_o as:

$$\omega_o = \omega = 2\pi f_o = \frac{1}{\sqrt{6}RC} \qquad (\text{in rad/s}) \qquad (Eq.2)$$

Where: f_o is the frequency in Hertz. Equating the imaginary parts on both sides yields:

$$-R_F(-jR^3C^3\omega^3) = R_1(-jR^3C^3\omega^3 + j5RC\omega)$$

This gives:

$$R_F = R_1\left(\frac{5}{R^2C^2\omega^2} - 1\right) \qquad (Eq.3)$$

Substituting the value of $\omega = \omega_o$ from Eq. (2) into Eq. (3) yields:

$$\frac{R_F}{R_1} = \frac{5}{R^2C^2\left(\frac{1}{\sqrt{6}RC}\right)^2} - 1 = 29$$

This value gives the required condition for sustained oscillations.

12. The following diagram outlines a quadrature oscillator circuit.

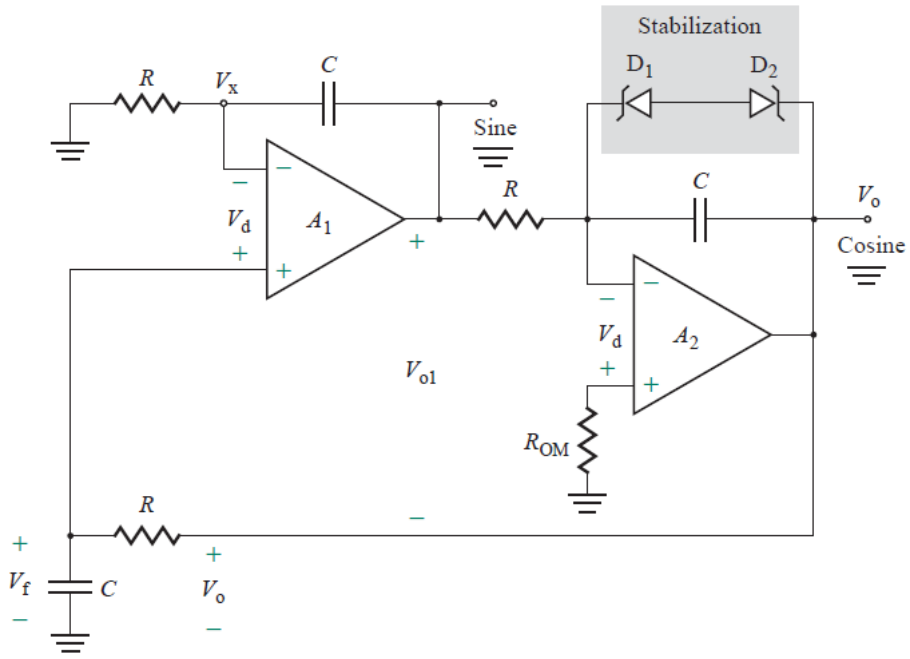

a. By referring to the diagram given above, describe the operation of quadrature oscillator. What is the role of the Zener diodes in the circuit? [4 marks]

b. Derive the overall closed-loop gain A_v of the amplifiers A_1 and A_2. [24 marks]

c. Design the oscillator circuit for operating frequency of 200 Hz and assume C = 0.1 µF. [4 marks]

Solution

a. A quadrature oscillator, as shown in the figure above, generates two signals (sine and cosine) that are in quadrature—that is, out of phase by 90°. The actual location of sine and cosine signals is arbitrary. In the given quadrature oscillator circuit, the output of amplifier A_1 is labelled as sine and that of amplifier A_2 as cosine.

This oscillator requires a dual op-amp. Amplifier A_2 operates as an inverting integrator and provides a phase shift of -270° (or 90°). Amplifier A_1, in combination with the feedback network, operates as a noninverting integrator and provides the remaining -90° (or 270°) to give the total phase shift of 360° that is required to satisfy the condition of oscillation.

This oscillator can be stabilized by connecting two Zener diodes back-to-back across one of the integrating capacitors, as shown in circuit diagram above by the shaded area.

b. The figure given below is the equivalent circuit of the feedback network of the quadrature oscillator circuit.

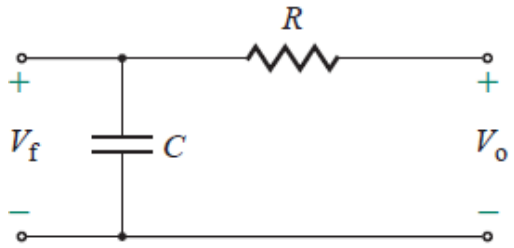

The transfer function of the feedback network shown in the figure above in Laplace's domain of s is given by:

$$\beta(s) = \frac{V_f(s)}{V_o(s)} = \frac{1/Cs}{1 + 1/Cs} = \frac{1}{1 + RCs} \quad (Eq.1)$$

If V_{o1} is the voltage at the output of amplifier A_1, the voltage V_x at its inverting terminal is given by:

$$V_x = \frac{RV_{o1}}{R + 1/Cs} = \frac{RCsV_{o1}}{1 + RCs} \quad (Eq.2)$$

Since the differential voltage between the op-amp terminals is very small ($V_d \approx 0$), we can write:

$$V_f = V_x - V_d \approx V_x$$

That is,

$$\frac{V_o(s)}{1 + RCs} = \frac{RCsV_{o1}}{1 + RCs} \quad (Eq.3)$$

which gives the transfer function of amplifier A_1, including the feedback network, as:

$$\beta A_1(s) = \frac{V_{o1}(s)}{V_o(s)} = \frac{1}{RCs} \quad (Eq.4)$$

In the frequency domain, Eqs. (1) and (4) become, respectively,

$$\beta(j\omega) = \frac{1}{1 + j\omega RC} \quad (Eq.5)$$

and

$$\beta A_1(j\omega) = \frac{1}{j\omega RC} = -\frac{j}{\omega RC} \quad (Eq.6)$$

The transfer function of amplifier A_2 is:

$$A_2(j\omega) = \frac{V_o(j\omega)}{V_{o1}(j\omega)} = -\frac{1}{j\omega RC} = \frac{j}{\omega RC}$$

which gives a phase shift of 90°. Thus, $\beta G_1(j\omega)$ must give a phase shift of -90°.

To provide a phase shift of -90°, $|\beta G_1(j\omega)|$ in Eq. (6) must equal unity. That is, $\omega RC = 1$, and the frequency of oscillation is given by:

$$f_o = \frac{1}{2\pi RC} \quad \text{(in Hz)} \qquad (Eq.7)$$

At this frequency, the magnitude of $\beta(j\omega)$ in Eq. (5) becomes:

$$\beta = |\beta(j\omega)| = \left|\frac{1}{1+j1}\right| = \frac{1}{\sqrt{2}} \qquad (Eq.8)$$

The loop gain becomes:

$$\beta A(j\omega) = A_2(j\omega)\beta A_1(j\omega) = \left(\frac{j}{\omega RC}\right)\left(\frac{1}{j\omega RC}\right) = \frac{1}{\omega^2 RC} = 1$$

Therefore, the overall closed-loop gain, A_v of amplifiers A_1 and A_2 is given by:

$$A_t = \frac{1}{\beta} = \sqrt{2} = 1.4142 \qquad (Eq.9)$$

which implies a constant gain of 1.4142.

c. The design of a quadrature oscillator is very straight forward. For f_o = 200 Hz and assuming C = 0.1 µF, using equation in the equation derived in part (b), the operating frequency of the quadrature oscillator is:

$$f_o = \frac{1}{2\pi RC}$$

This gives the value of the resistor R = 7958 Ω (e.g. use a 10-kΩ potentiometer).