XMUT303 Analogue Electronics

Tutorial 3: Op Amp Circuits

A. Standard Op Amp Circuit

1. Given that the op amp in the circuit of figure below is ideal. The values of the resistors used in the circuit are: $R_1 = 5\ \text{k}\Omega$, $R_2 = 20\ \text{k}\Omega$, $R_3 = 8\ \text{k}\Omega$, $R_4 = 2\ \text{k}\Omega$, and a load resistor at the output, $R_L = 27\ \text{k}\Omega$. Voltage sources $V_1 = V_a$ and $V_2 = 5\ \text{V}$. The op amp is connected to ± 10 V power supply.

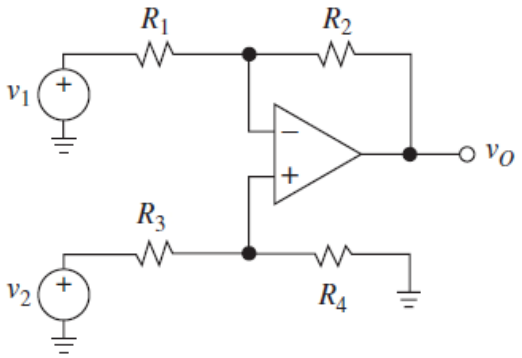

   a. Describe what op amp circuit configuration is this? [4 marks]

   b. Find an expression for the output voltage V_o in terms of the input voltage V_a across the two inputs of the op amp circuit. [8 marks]

   c. Suppose $V_a = 2\ \text{V}$. What value of R_2 will cause the op amp to saturate? [8 marks]

2. For a typical instrumentation amplifier circuit as shown in the figure below:

   a. What are the characteristics of instrumentation amplifier that makes it different from the difference amplifier? [4 marks]

   b. Derive its difference and buffer gains and determine its overall gain. [18 marks]

c. When all resistors in the instrument amplifier is made equal to 10 kΩ and R_G is equal to 2 kΩ, determine the output voltage when the inputs voltages are V_1 = 100 mV and V_2 = 200 mV. [6 marks]

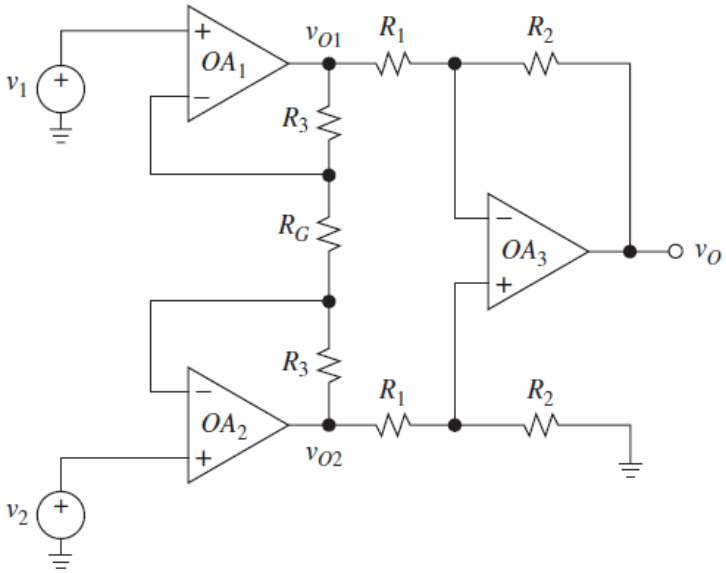

B. Converter Circuit

3. Unlike the current to voltage converter (I-V converter) circuit, a voltage-to-current converter (V-I converter) circuit as shown below converts voltage to current.

   a. Describe the working mechanism of the given voltage-to-current converter (e.g. it is also known as Howland current source circuit). [4 marks]

   b. Determine the equation that outlines its operation. [4 marks]

   c. For input voltage, V_I = 5 V and value of setting resistor (R_3) = 5 kΩ, determine the current that flows in the load resistor. [2 marks]

   d. When the value of load resistor is altered, does the current that flows in the load resistor change? [2 marks]

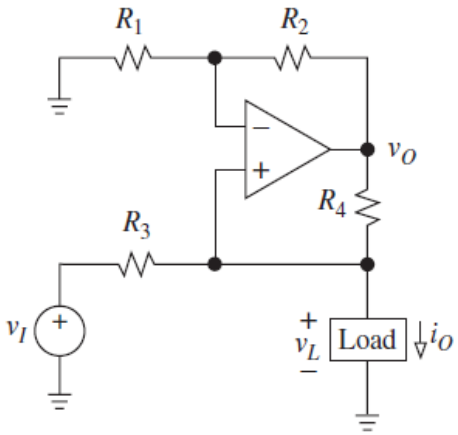

4. Depending on the design specification, any signal or waveform conversion operations can be performed with operational amplifiers circuits.

   a. Using two op amps, design a circuit that can perform subtraction operation of two signals. [6 marks]

   b. Some electronic devices e.g. tunnel diodes, triodes, thyristors, and so forth, have negative differential resistance characteristics. It is important that you could design op amp based circuit that could deal with these types of devices. Design an op-amp based circuit that performs negative impedance converter with current inversion. [8 marks]

C. Rectifier Circuit

5. In the figure below is a precision half-wave rectifier circuit. It consists of non-inverting amplifier with diode D_1 in the feedback loop of an op-amp.

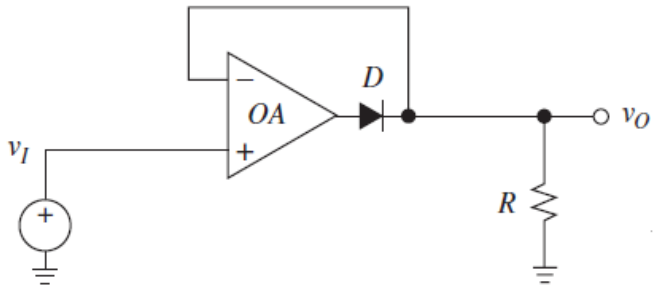

   a. Describe why the op-amp based rectifier circuit provides a more precise rectification compared with diode-based rectifier circuit. [4 marks]

   b. Describe the operation of the given circuit. The analysis of this circuit can be done considering two distinct cases of $V_i > 0$ V and $V_i < 0$ V. [8 marks]

   c. Sketch the waveform of the input and output of the circuit and also the output voltage-input voltage transfer function graph of its operation. [4 marks]

6. Given in the figure below is a full-wave precision rectifier circuit. Notice the values of resistors $R_x = R_1 \parallel R_f$ and $R_y = R_2 \parallel R_3 \parallel R_4$ given in the circuit.

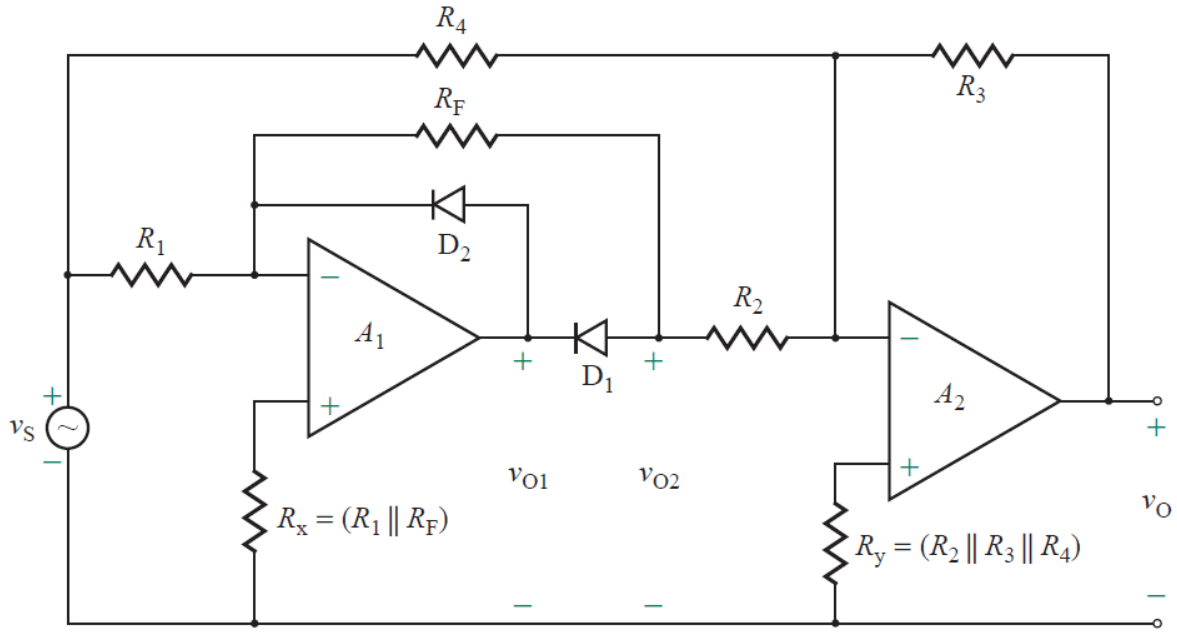

Describe the operation of the circuit and derive the equation for a special case of $R_1 = R_2 = R_F = R$ and $R_3 = R_4 = 2R$ and use a sinusoidal input voltage $v_S = V_m \sin \omega t$. Illustrate your answer with graph of the waveforms involved in the circuit. [12 marks]

D. Comparator Circuit

7. In the circuit of figure given below let V_{REF} = 2.0 V, R_1 = 20 kΩ, and R_2 = 30 kΩ.

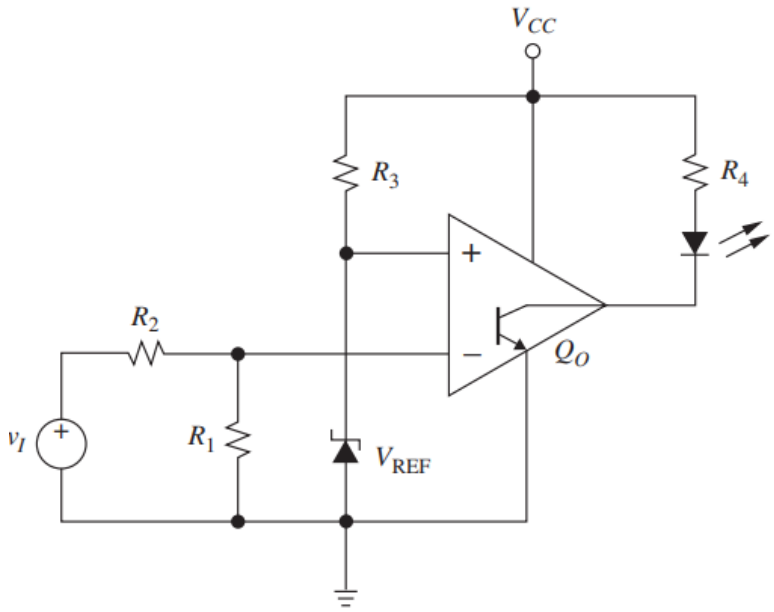

a. Determine the value of input voltage (V_I) that will turn on the LED. [6 marks]

b. Assuming a LM339 comparator with V_{OS} = 5 mV (maximum) and I_B = 250 nA (maximum) e.g. values from its datasheet, estimate the worst-case error of your circuit. [10 marks]

8. Referring to the on-off temperature controller circuit of figure given below, specify suitable resistances so that the set point can be adjusted anywhere between 50° C and 100°C by means of a 5-kΩ potentiometer. From datasheet of LM335, its temperature coefficient is given as 10 mV/°K (note: that for temperature conversion 0°K = 273.2°C). [10 marks]

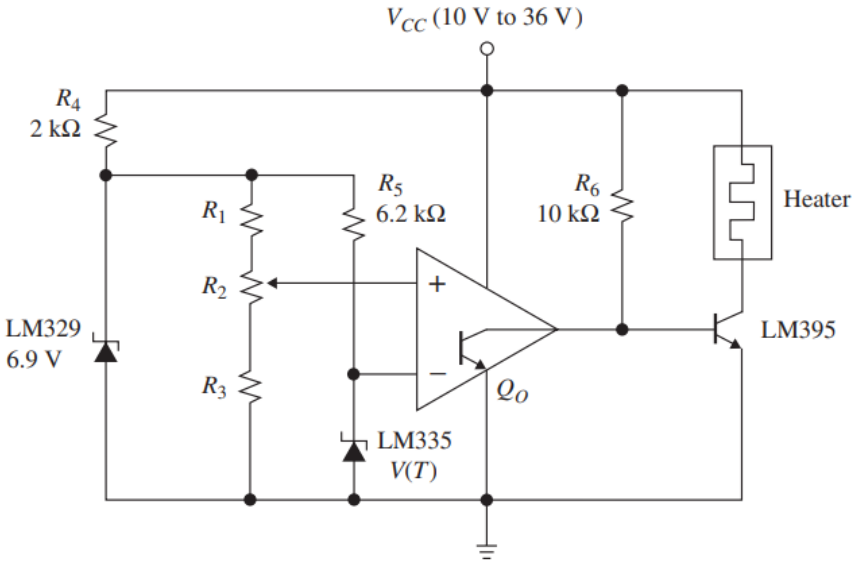

9. Given in the figure below is a typical Schmitt trigger circuit along with its voltage transfer characteristic graph.

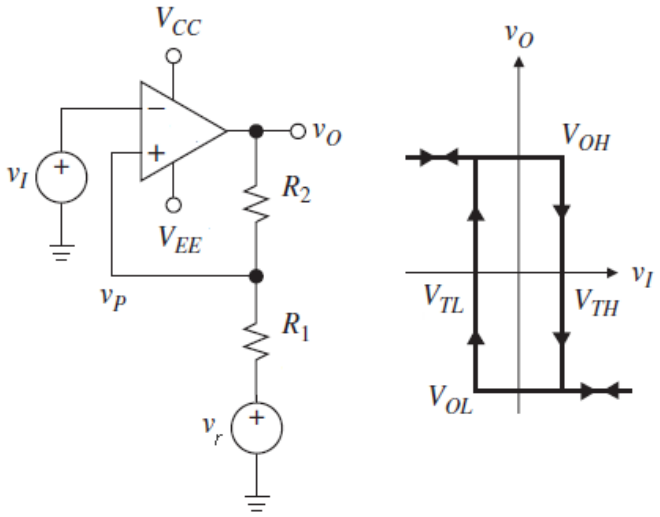

a. Describe the role of hysteresis in the circuit. [4 marks]

b. Describe the operation of the given circuit. [4 marks]

c. Specify suitable resistances of the resistors (R_1 and R_2) and reference voltage (V_r) for LTP = 2 V & UTP = 3 V. Given that output voltage saturated to the supply voltage = ± 10 V. [30 marks]

E. Oscillator Circuit

10. For a given Wien-Bridge oscillator circuit as shown below.

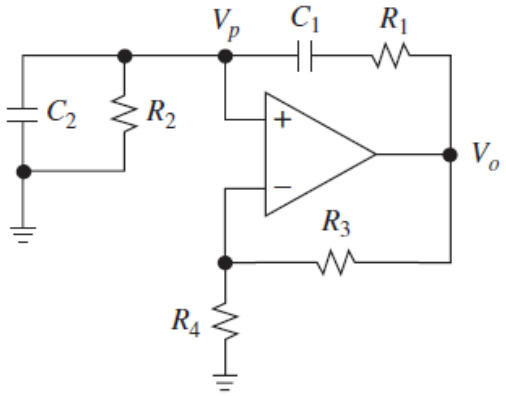

a. Prove that the feedback gain (β) equation that governs the operation of the circuit is as shown below for $R_1 = R_2 = R$ and $C_1 = C_2 = C$. [10 marks]

$$\beta = \frac{V_f(s)}{V_o(s)} = \left(\frac{sRC}{s^2R^2C^2 + 3sRC + 1}\right)$$

b. Derive the expression of the resistors R_3 and R_4 in the circuit that would meet the required constant oscillation condition of the oscillator. [20 marks]

c. Determine the values of the components of the oscillator circuit when frequency of the oscillator f = 1 kHz and if the value of the capacitor is assumed to be 10 pF. [8 marks]

11. The figure below shows a phase-shift oscillator circuit. Notice that the feedback network consists of three RC circuits with identical component values and resistor $R_{OM} = R_1 \parallel R_F$.

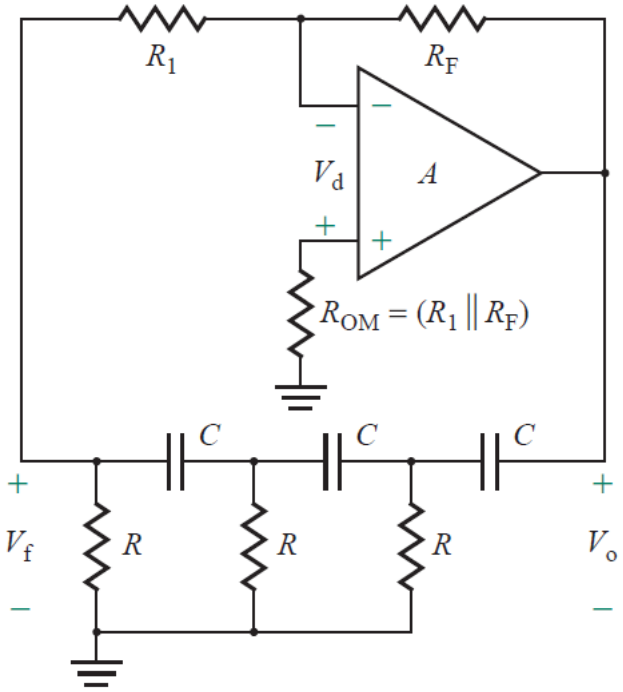

a. Prove that the transfer function of the feedback network is given by: [12 marks]

$$\beta(s) = \frac{V_f(s)}{V_o(s)} = -\frac{R_F}{R_1}\left(\frac{R^3C^3s^3}{R^3C^3s^3 + 6R^2C^2s^2 + 5RCs + 1}\right)$$

b. Derive the closed-loop voltage gain of the op-amp circuit (R_F/R_1). [12 marks]

12. The following diagram outlines a quadrature oscillator circuit.

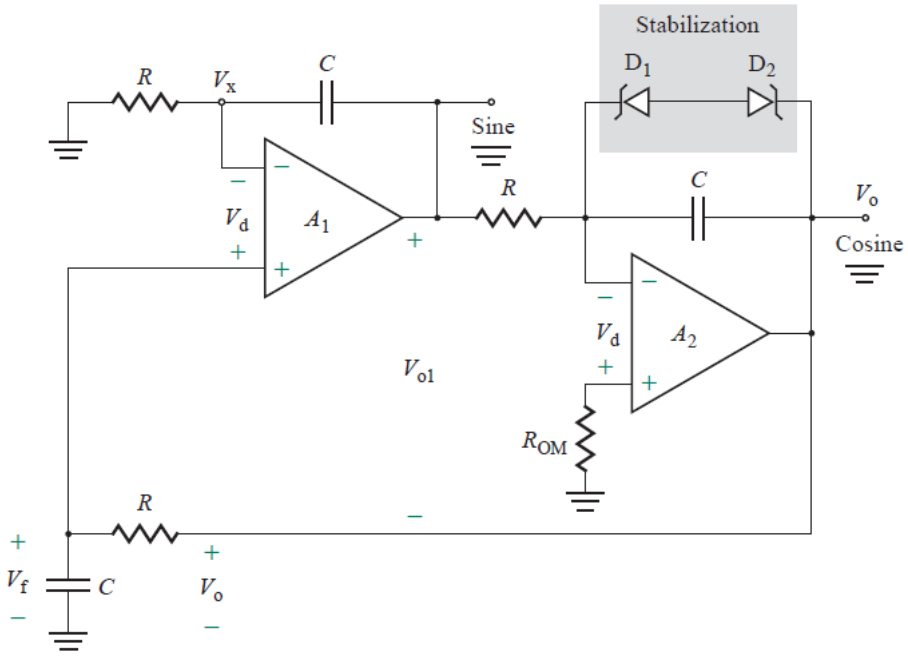

a. By referring to the diagram given above, describe the operation of quadrature oscillator. What is the role of the Zener diodes in the circuit? [4 marks]

b. Derive the overall closed-loop gain A_v of the amplifiers A_1 and A_2. [24 marks]

c. Design the oscillator circuit for operating frequency of 200 Hz and assume C = 0.1 µF. [4 marks]