XMUT303 Analogue Electronics

Tutorial 5: Power Amplifiers (Solution)

A. Power Amplifiers

1. For classes of power amplifier circuits given below, describe each of the power amplifier classes in terms of their circuits, output signals with regard to input signals and Q-point biasing requirements of the transistor.

   a. Class A. [5 marks]

   b. Class B. [5 marks]

   c. Class AB. [5 marks]

   d. Class C. [5 marks]

   e. Class D. [5 marks]

Solution

a. In the Class A amplifier, the output signal varies for a full 360° of the input signal. Class A power amplifier requires the Q -point to be biased at a level so that at least half the signal swing of the output may vary up and down without going to a high enough voltage to be limited by the supply voltage level or too low to approach the lower supply level, or 0 V.

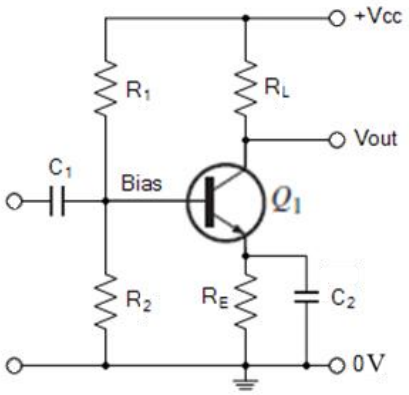

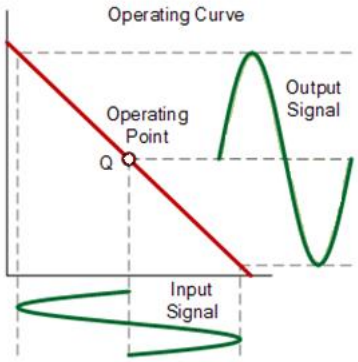

b. In the Class B amplifier, it provides an output signal varying over one-half the input signal cycle, or for 180° of signal. For Class B amplifier, the DC bias point for Class B is at 0 V, with

the output then varying from this bias point for a half-cycle. Obviously, the output is not a faithful reproduction of the input if only one half-cycle is present.

Two Class B operations—one to provide output on the positive-output half-cycle and another to provide operation on the negative-output half-cycle—are necessary.

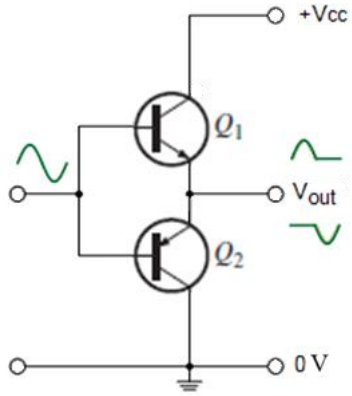

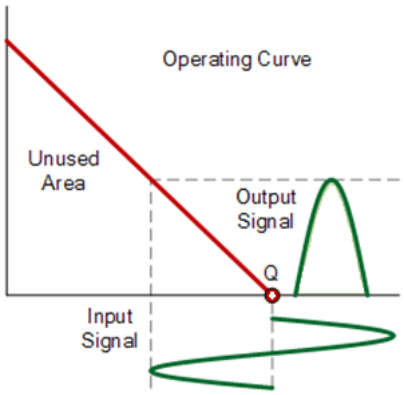

c. For Class AB operation, the output signal swing occurs between 180° and 360° and is neither Class A nor Class B operation.

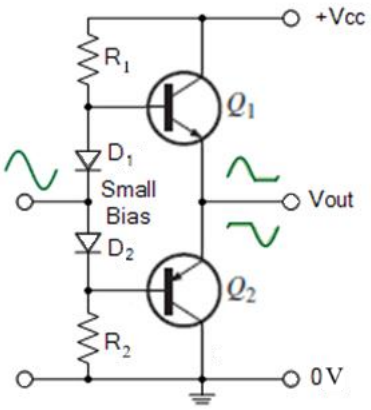

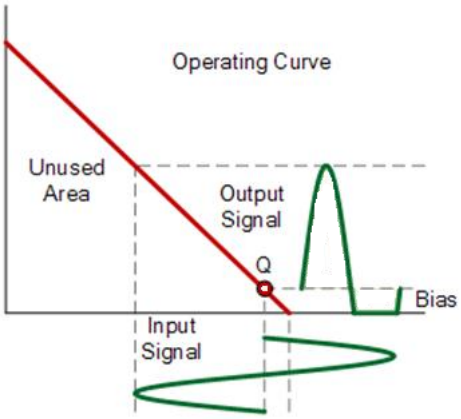

Class AB amplifier may be biased at a DC level above the zero-base-current level of Class B and above one-half the supply voltage level of Class A (e.g. this bias condition is Class AB). Class AB operation still requires a push–pull connection to achieve a full output cycle, but the DC bias level is usually closer to the zero-base-current level for better power efficiency.

d. The output of a Class C amplifier is biased for operation at less than 180° of the cycle and will operate only with a tuned (resonant) circuit, which provides a full cycle of operation for the tuned or resonant frequency.

In the Class C amplifier, Q-point for the biasing is determined at negative emitter current of the transistor. Since it is designed for a tuned/resonant condition, the operation of this class of amplifier is therefore used in special areas of tuned circuits, such as circuits in the radio or communications.

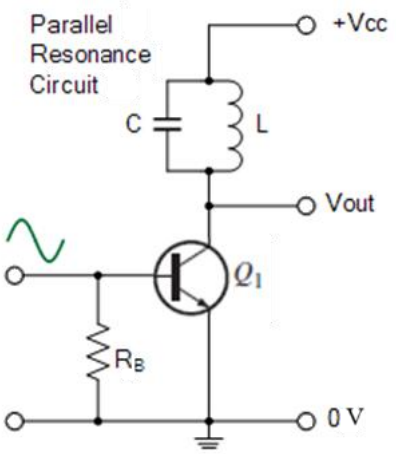

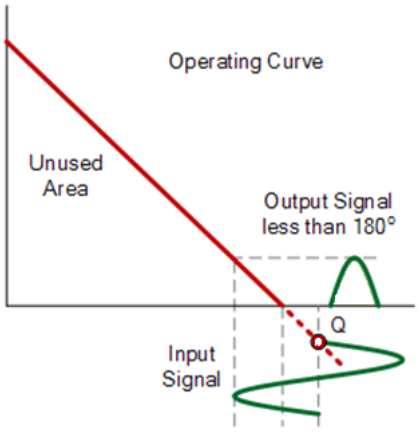

e. The Class D amplifier is a form of amplifier operation using pulse (digital) signals, which are on for a short interval and off for a longer interval.

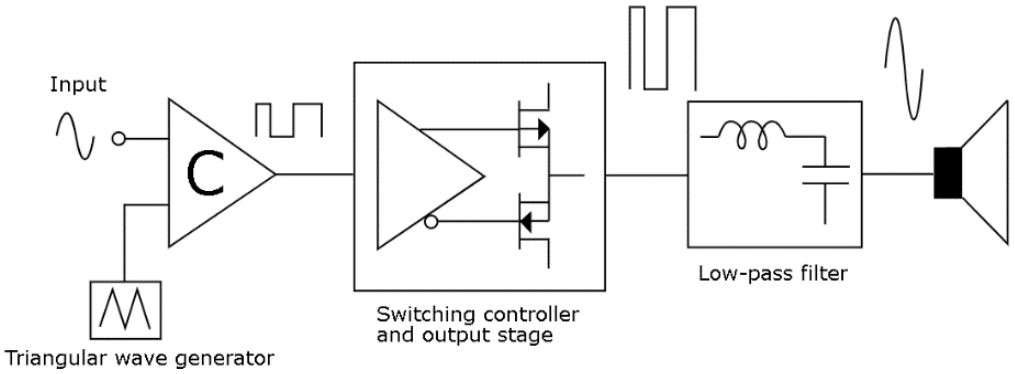

Using digital techniques makes it possible to obtain a signal that varies over the full cycle (using sample and-hold circuitry) to recreate the output from many pieces of input signal. The major advantage of Class D operation is that the amplifier is "on" (using power) only for short intervals and the overall efficiency can practically be very high.

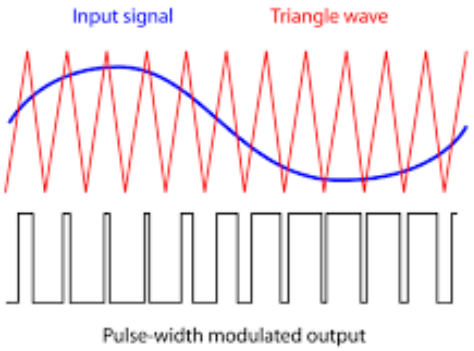

2. For Class A, Class B, Class AB, Class C, and Class D power amplifiers, compare these classes of power amplifier in terms of:

   a. The conduction angle of the transistor used in the circuit. [10 marks]

   b. The efficiency of the amplifier. [6 marks]

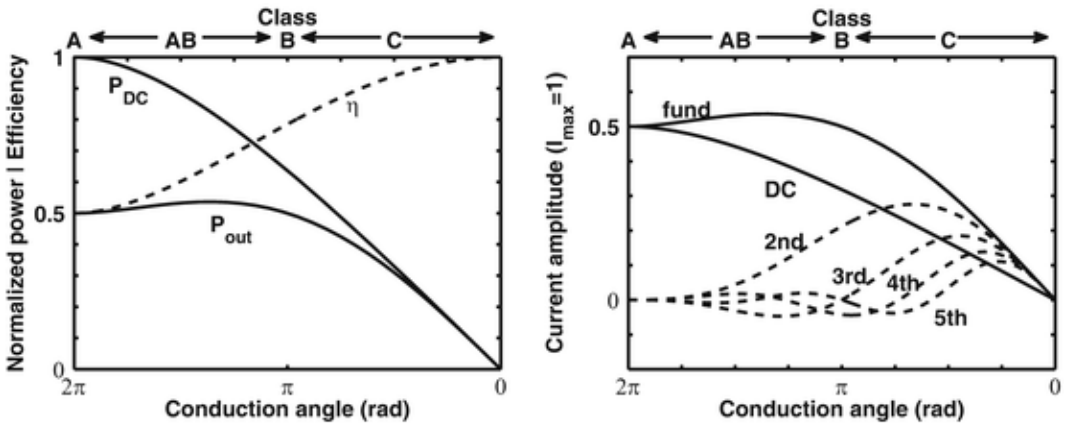

Solution

For the stated classes of power amplifier, compare their differences.

a. As far as the conduction angle is concerned using the graphs given the figure above, Class A amplifier has full cycle 360° of conduction whereas Class B amplifier has half cycle 180° of conduction.

This is in contrast with the Class AB amplifier that has slightly more than 180° of conduction and the Class C amplifier has slightly less than 180° of conduction.

Furthermore, Class D amplifier is an ON-OFF non-linear switching type of power amplifier.

Amplifier Class	**Description**	**Conduction Angle**
Class A	Full cycle 360° of Conduction	$\theta = 2\pi$
Class B	Half cycle 180° of Conduction	$\theta = \pi$
Class AB	Slightly more than 180° of conduction	$\pi < \theta < 2\pi$
Class C	Slightly less than 180° of conduction	$\theta < \pi$
Class D	ON-OFF non-linear switching	$\theta = 0$

b. The power efficiency of an amplifier, defined as the ratio of power output to power input, improves (gets higher) going from Class A to Class D as shown in the figure below.

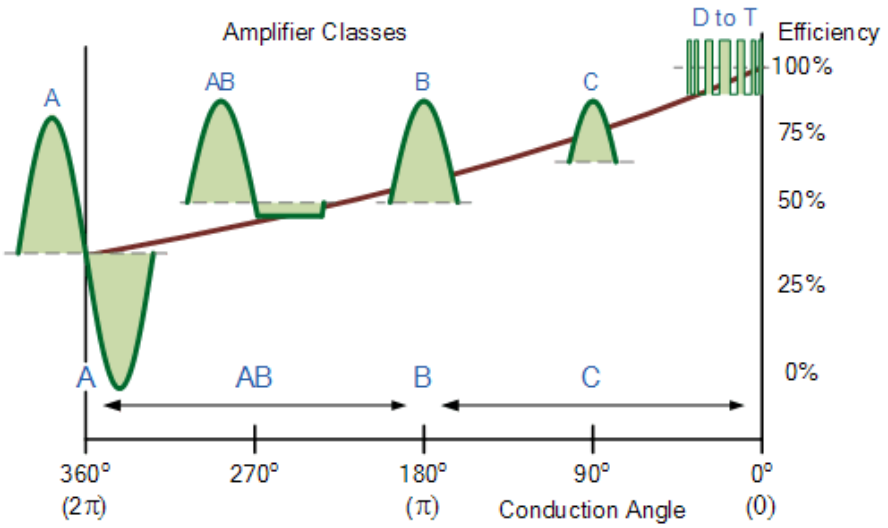

Class A amplifier, with dc bias at one-half the supply voltage level, uses a good amount of power to maintain bias, even with no input signal applied. This results in very poor efficiency, especially with small input signals, when very little ac power is delivered to the load. In fact, the maximum efficiency of a Class A circuit, occurring for the largest output voltage and current swing, is only 25% with a direct or series-fed load connection and 50% with a transformer connection to the load.

Class B operation, with no DC bias power for no input signal, can be shown to provide a maximum efficiency that reaches 78.5%.

Since Class AB falls between Class A and Class B in bias, it also falls between their efficiency ratings—between 25% (or 50%) and 78.5%.

Class C/D operation can achieve power efficiency over 90% and provides the most efficient operation of all the operating classes.

B. Class A Amplifier

3. For a Class A power amplifier circuit in the figure given below, it has an input voltage that results in a base current of 10 mA peak. Calculate the following:

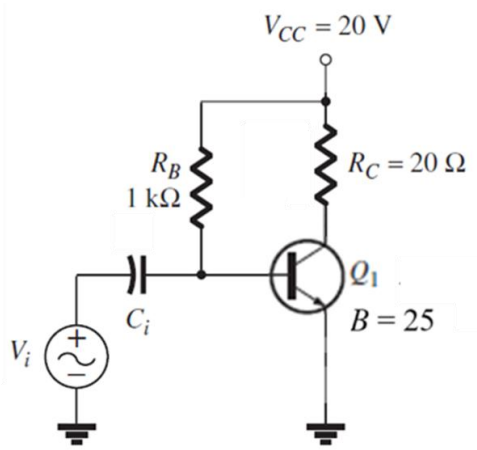

a. The Q-point of the biasing circuit of the amplifier. [10 marks]

b. Input power of the amplifier. [2 marks]

c. Output power of the amplifier. [4 marks]

d. Efficiency of the amplifier. [2 marks]

Solution

a. Using relevant equation for the given transistor, we can determine the Q-point to be as follows.

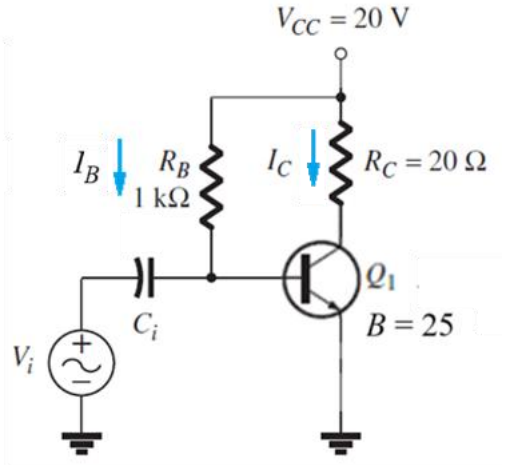

The quotient current at the base of the transistor:

$$I_{B_Q} = \frac{V_{CC} - 0.7\text{ V}}{R_B} = \frac{20\text{ V} - 0.7\text{ V}}{1\text{ k}\Omega} = 19.3\text{ mA}$$

The quotient current at the collector of the transistor:

$$I_{C_Q} = \beta I_{B_Q} = (25)(19.3\text{ mA}) = 0.4825\text{ A}$$

The quotient voltage across the collector-emitter of the transistor:

$$V_{CE_Q} = V_{CC} - I_{C_Q}R_C = 20\text{ V} - (0.4825\text{ A})(20\ \Omega) = 10.4\text{ V}$$

This bias point is marked on the transistor collector characteristic of figure given below.

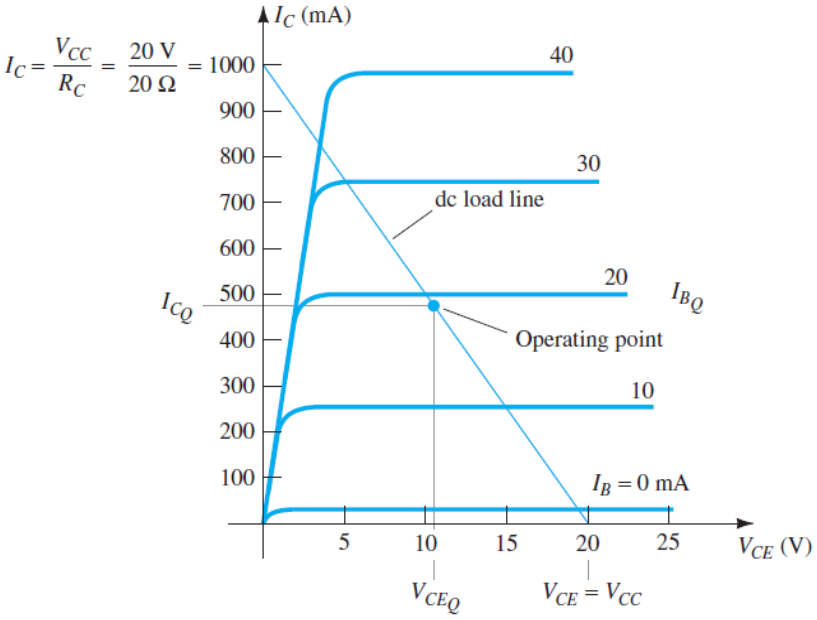

The ac variation of the output signal can be obtained graphically using the DC load line drawn on the graph by connecting $V_{CE} = V_{CC} = 20\text{ V}$ with $I_C = V_{CC}/R_C = (20\text{ V})/(20\ \Omega) = 1\text{ A}$, as shown in the graph above.

b. Using equation for input power results, the input power of the amplifier is:

$$P_i(dc) = V_{CC}I_{C_Q} = (20\text{ V})(0.4825\text{ A}) = 9.6\text{ W}$$

c. When the input AC base current increases from its DC bias level, the collector current rises by:

$$I_C(p) = \beta I_B(p) = (25)\big(10\text{ mA (peak)}\big) = 250\text{ mA peak}$$

Using the equation for the output power of the amplifier yields:

$$P_o(ac) = I_C^2(rms)R_C = \left(\frac{I_C^2}{2}\right)R_C = \left[\frac{(250\times10^{-3}\text{A})^2}{2}\right](20\ \Omega) = 0.625\text{ W}$$

d. The amplifier's power efficiency can then be calculated using the equation for calculating efficiency:

$$\%\,\eta = \left[\frac{P_o(ac)}{P_i(dc)}\right]\times 100\% = \left(\frac{0.625\text{ W}}{9.6\text{ W}}\right)\times 100\% = 6.5\%$$

C. Class B Amplifiers

4. For a Class B power amplifier providing a 20-V peak signal to a 16-Ω load (speaker) and a power supply of V_{CC} = 30 V, determine:

   a. The input power of the amplifier. [6 marks]

   b. The output power of the amplifier. [2 marks]

   c. The circuit efficiency of the amplifier. [2 marks]

Solution

a. A 20-V peak signal across a 16-Ω load provides a peak load current of:

$$I_L(p) = \frac{V_L(p)}{R_L} = \frac{20\text{ V}}{16\ \Omega} = 1.25\text{ A}$$

The dc value of the current drawn from the power supply is then:

$$I_{dc} = \left(\frac{2}{\pi}\right) I_L(p) = \left(\frac{2}{\pi}\right)(1.25\text{ A}) = 0.796\text{ A}$$

The input power delivered by the supply voltage is:

$$P_i(dc) = V_{CC} I_{dc} = (30\text{ V})(0.796\text{ A}) = 23.9\text{ W}$$

b. The output power delivered to the load is:

$$P_o(ac) = \frac{V_L^2(p)}{2R_L} = \frac{(20\text{ V})^2}{2(16\ \Omega)} = 12.5\text{ W}$$

c. This yields a resulting efficiency of:

$$\%\,\eta = \left[\frac{P_o(ac)}{P_i(dc)}\right] \times 100\% = \left(\frac{12.5\text{ W}}{23.9\text{ W}}\right) \times 100\% = 52.3\%$$

5. Class AB power amplifier or push-pull Class B power amplifier introduces some improvement towards design of Class B power amplifier.

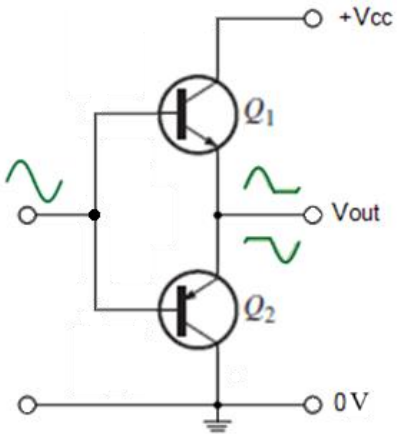

a. Describe the crossover distortion problem which is typically associated with the operation of Class AB amplifier. [10 marks]

b. Describe the method to deal with the crossover distortion problem. [5 marks]

c. Describe the circuit and operations of the resistors compensated biasing for the Class AB amplifier circuit. [10 marks]

d. Describe the circuit and operations of the diodes compensated biasing for the Class AB amplifier circuit. [10 marks]

e. Describe op amp feedback improvement introduced of the Class AB amplifier for eliminating the crossover distortion. [10 marks]

Answer

a. Crossover distortion problem in Class AB amplifier is a type of distortion which is caused by switching between devices driving a load. It is most seen in complementary, or "push-pull", Class-B amplifier stages, although it is occasionally seen in other types of circuits as well.

The term crossover signifies the "crossing over" of the signal between devices, in this case, from the upper transistor to the lower and vice versa.

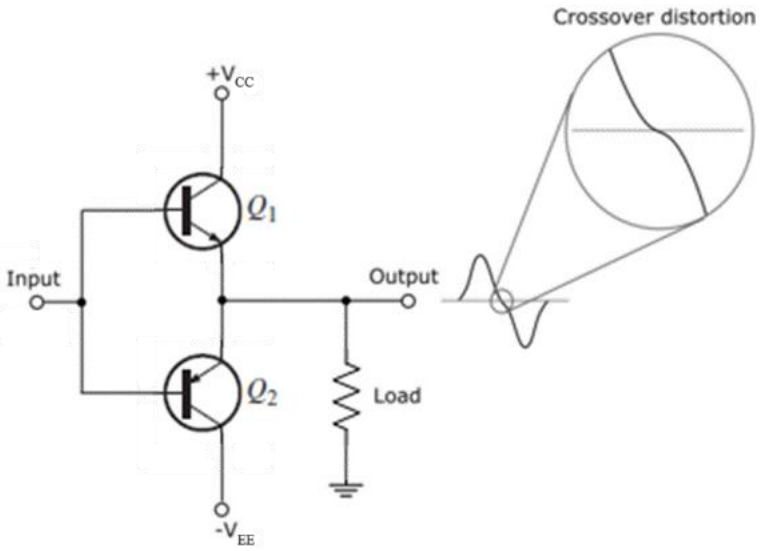

The diagram above shows a typical Class-B emitter-follower complementary output stage. Under no signal conditions, the output is exactly midway between the supplies (i.e., at 0 V).

When this is the case, the base-emitter bias of both the transistors is zero, so they are in the cut-off region where the transistors are not conducting.

Consider a positive-going swing: As long as the input is less than the required forward V_{BE} drop (≈ 0.65 V) of the upper NPN transistor, it will remain off or conduct very little.

This is the same as a diode operation as far as the base circuit is concerned, and the output voltage does not follow the input (e.g. the lower PNP transistor is still off because its base-emitter diode is being reverse biased by the positive-going input).

The same applies for the lower transistor but for a negative-going input. Thus, between about ± 0.65 V of input, the output voltage is not a true replica or amplified version of the input, and we can see that as a "kink" in the output waveform near 0 V (or where one transistor stops conducting and the other starts).

This kink is the most pronounced form of crossover distortion, and it becomes more evident and intrusive when the output voltage swing is reduced.

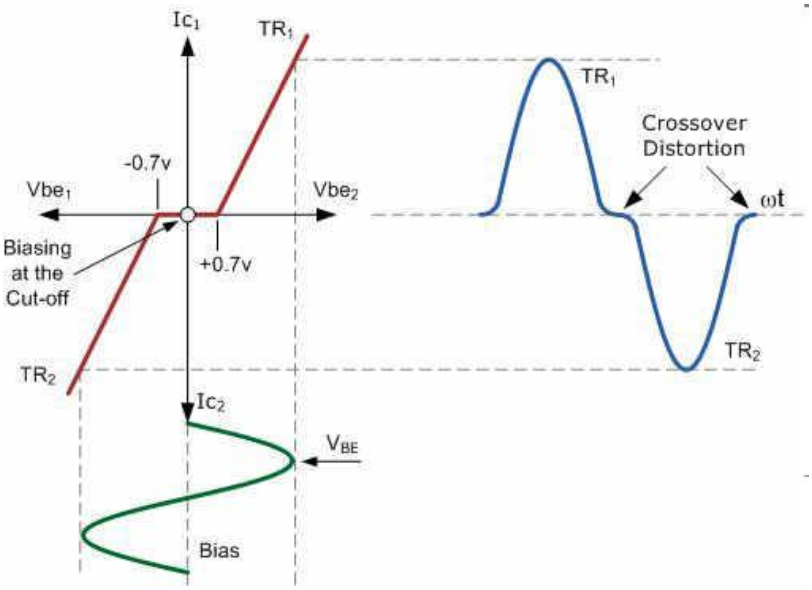

b. In the case of a Class B or Class AB amplifier, crossover distortion can be reduced by using a slight forward bias in the base circuit such that the transistors are idling at a small output current.

The forward bias causes the circuit to operate in Class AB mode, so both transistors are slightly on during crossover. This can reduce or eliminate the characteristic kink of crossover distortion, although other types of crossover distortion will remain.

c. The circuit of the resistors compensated biasing circuit for Class AB amplifier and their operations are as follows.

An adjustable resistor, or potentiometer can be used to bias both transistors onto the verge of conduction. Then transistors Q_1 and Q_2 are biased via R_{B1} - V_{R1} - R_{B2} so that their outputs are balanced and zero quiescent current flows into the load.

The input signal which is applied via capacitors C_1 and C_2 is superimposed onto the biasing voltages and applied to the bases of both transistors. Note that both the signals applied to each base has the same frequency and amplitude as they originated from V_{IN}.

The advantage of this adjustable biasing arrangement is that the basic amplifier circuit does not require the use of complimentary transistors with closely matched electrical characteristics or an exact resistor ratio within the voltage divider network as the potentiometer can be adjusted to compensate.

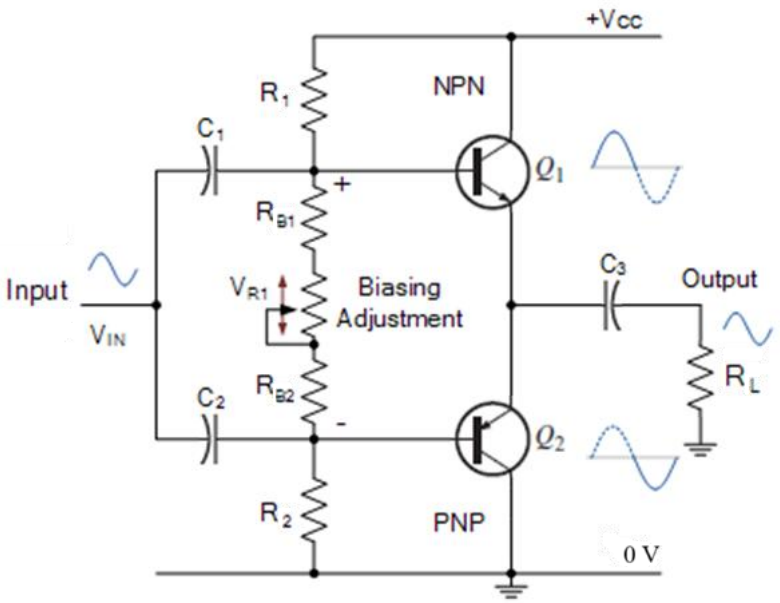

As resistors are passive devices that convert electrical power into heat due to its power rating, the resistive biasing of a Class AB amplifier, either fixed or adjustable, can be very sensitive to changes in temperature.

Any small changes in the operating temperature of the biasing resistors (or transistors) may affect their value producing undesirable changes in the quiescent collector current of each transistor.

One way to overcome this temperature related problem is to replace the resistors with diodes to use diode biasing.

d. The circuit of the diode compensated biasing circuit for Class AB amplifier and their operations are as follows.

While the use of biasing resistors may not solve the temperature problem, one way to compensate for any temperature related variation in the base-emitter voltage, (V_{BE}) is to use a pair of normal forward biased diodes within the amplifiers biasing arrangement as shown below.

A small-constant current flows through the series circuit of R_1 - D_1 - D_2 - R_2, producing voltage drops which are symmetrical either side of the input. With no input signal voltage applied, the point between the two diodes is zero volts.

As current flows through the chain, there is a forward bias voltage drop of approximately 0.7 V across the diodes which is applied to the base-emitter junctions of the switching transistors.

Therefore, the voltage drop across the diodes, biases the base of transistor Q_1 to about 0.7 volts, and the base of transistor Q_2 to about –0.7 Volts. Thus, the two silicon diodes provide a constant voltage drop of approximately 1.4 Volts between the two bases biasing them above cut-off.

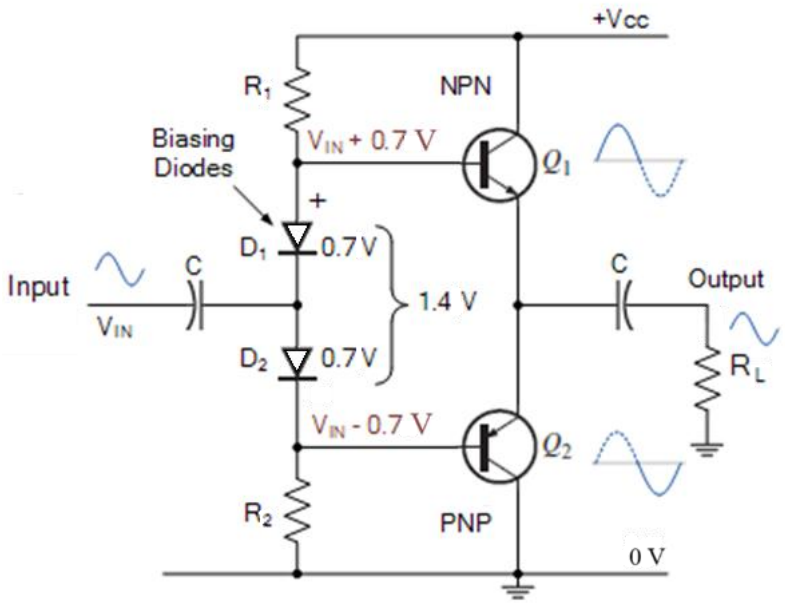

As the temperature of the circuit rises, so too does that of the diodes as they are located next to the transistors. The voltage across the PN junction of the diode thus decreases diverting some of the transistors base current stabilising the transistors collector current.

If the electrical characteristics of the diodes are closely matched to that of the transistors base-emitter junction, the current flowing in the diodes and the current in the transistors will be the same creating what is called a current mirror.

The effect of this current mirror compensates for variations in temperature producing the required Class AB operation thereby eliminating any crossover distortion.

e. As with most kinds of distortion, another way in which crossover distortion can be reduced is through the use of feedback. By comparing the output to the desired output, and adjusting the input to correct for any error, we can significantly reduce distortion. This may be done with an operational amplifier, as shown below, or with a discrete circuit.

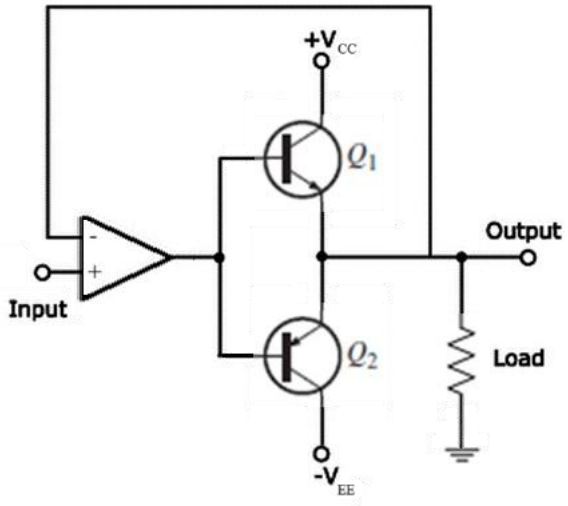

In the diagram shown above, the operational amplifier is used to reduce the distortion of a push-pull pair. Op-amps are differential voltage amplifiers with very high gain (sometimes modelled as infinite gain).

In an ideal model, the output of the op amp is held such that both inputs of the op amp must be at exactly the same voltage.

In this case, since the inverting input is directly connected to the output, the voltage at the non-inverting input is always equal to the voltage at the output and inverting input, hence eliminating distortion.

With a more precise model of an operational amplifier (with non-infinite gain) distortion is reduced by a factor equal to the gain of the op amp.

6. For a Class AB power amplifier circuit as shown in the figure below, assume that the circuit is a preamplifier stage with an output signal voltage of 3 V rms and an output resistance of 50 Ω is driving the push-pull power amplifier. Transistors Q_1 and Q_2 in the power amplifier have a β_{ac} of 100 and an r_e' of 1.6 Ω.

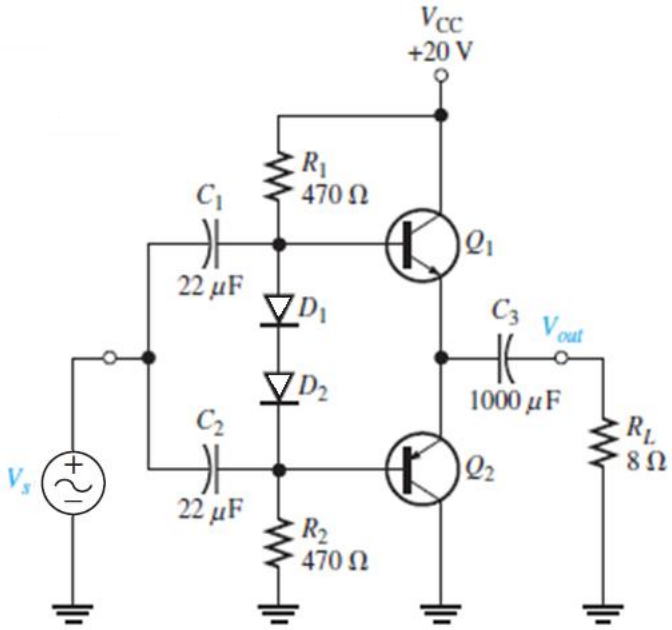

a. Determine the maximum ideal peak values for the output voltage and current of the amplifier. [4 marks]

b. Find the maximum AC output power and the DC input power of the amplifier. [4 marks]

c. Determine the loading effect that the power amplifier has on the preamp stage. [6 marks]

Solution

a. For the given Class AB amplifier, the ideal maximum peak output voltage is:

$$V_{o(peak)} \cong V_{CEQ} = \frac{V_{CC}}{2} = \frac{20\text{ V}}{2} = 10\text{ V}$$

The maximum peak output current is:

$$I_{o(peak)} \cong I_{C(sat)} = \frac{V_{CEQ}}{R_L} = \frac{10\text{ V}}{8\ \Omega} = 1.25\text{ A}$$

b. For calculation of the AC output and the DC output powers,

The AC output power is:

$$P_{o(AC)} = 0.25 I_{C(sat)} V_{CC} = 0.25(1.25\text{ A})(20\text{ V}) = 6.25\text{ W}$$

The DC output power is:

$$P_{o(DC)} = \frac{I_{C(sat)} V_{CC}}{\pi} = \frac{(1.25\text{ A})(20\text{ V})}{\pi} = 7.96\text{ W}$$

c. Looking from the input signal source, the bias resistors appear in parallel because both go to AC ground and the AC resistance of the forward-biased diodes is very small and can be ignored.

The reflected AC resistance at the emitter of either transistor at the input is:

$$R_{in(ac)} = \beta_{ac}(r_e' + R_L)$$

So, the signal source sees R_1, R_2, and $\beta_{ac}(r_e' + R_L)$ all in parallel. The total AC input resistance of the power amplifier is:

$$R_{in(tot)} = \beta_{ac}(r_e' + R_L) \parallel R_1 \parallel R_2 = 100(1.6\ \Omega + 8\ \Omega) \parallel 470\ \Omega \parallel 470\ \Omega = 188\ \Omega$$

Obviously, this will influence the preamp driver stage.

The output resistance of the preamp stage and the input resistance of the power amp effectively form a voltage divider that reduces the output signal from the preamp.

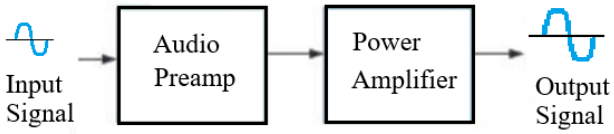

By considering the loading between the audio preamp with the power amplifier, the actual signal at the input of the power amp is:

$$V_{in} = \left(\frac{R_{in(tot)}}{R_s + R_{in(tot)}}\right) V_s = \left(\frac{188\ \Omega}{50\ \Omega + 188\ \Omega}\right)(3\text{ V}) = 2.37\text{ V}$$

D. Class C Amplifier

7. For a given Class C power amplifier circuit as shown in the figure below, it is realised as a common-emitter amplifier with a resistive load.

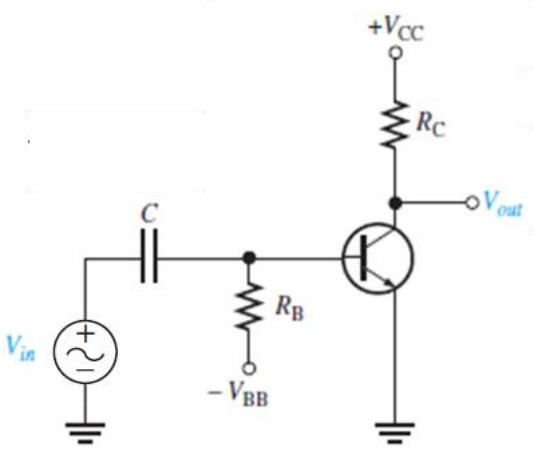

a. Describe basic operation of the amplifier. [5 marks]

b. Describe power dissipation of the amplifier. [5 marks]

c. State expressions that describe the power dissipation of the amplifier. [6 marks]

Solution

a. A Class C amplifier is normally operated with a resonant circuit load, so the resistive load is used only for the purpose of illustrating the concept. It is biased below cut-off with the negative V_{BB} supply.

The AC source voltage has a peak value that is slightly greater than $|V_{bb}| + V_{be}$ so that the base voltage exceeds the barrier potential of the base-emitter junction for a short time near the positive peak of each cycle, as illustrated in the figure given below.

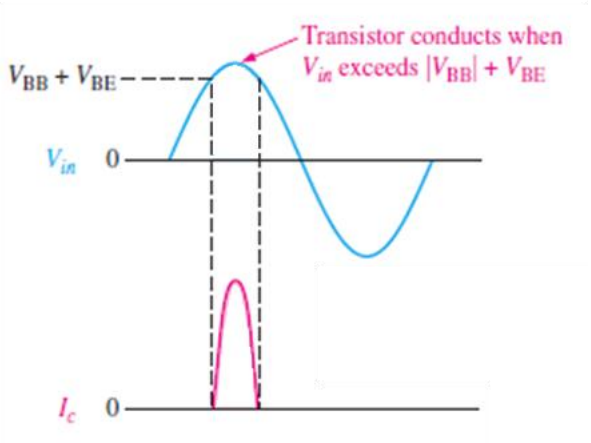

During this short interval, the transistor is turned on. When the entire AC load line is used, as shown in the figure below, the ideal maximum collector current is $I_c(sat)$, and the ideal minimum collector voltage is $V_{ce}(sat)$.

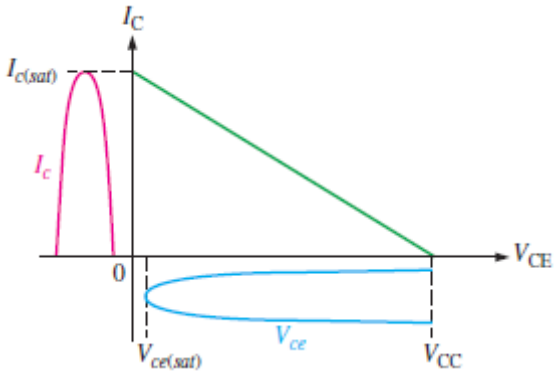

b. The power dissipation of the transistor in a Class C amplifier is low because it is on for only a small percentage of the input cycle. Figure below shows the collector current pulses.

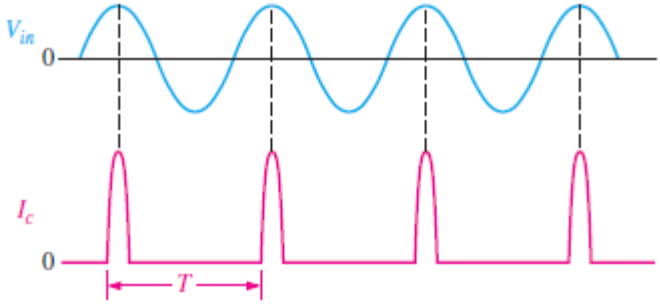

The time between the pulses is the period (T) of the ac input voltage. The collector current and the collector voltage during the on time of the transistor are shown in the figure given below.

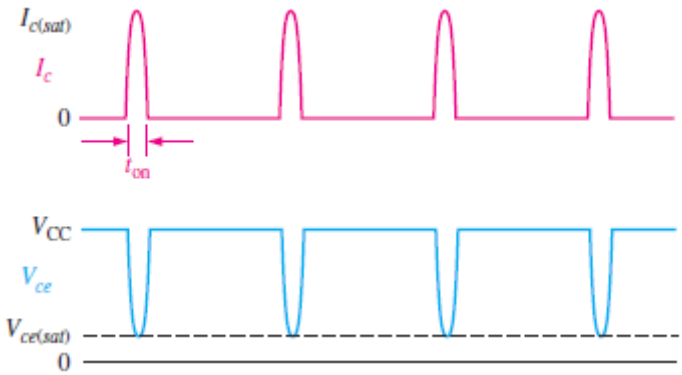

c. To avoid complex mathematics, we will assume ideal pulse approximations.

Using this simplification, if the output swings over the entire load, the maximum current amplitude is $I_c(sat)$ and the minimum voltage amplitude is $V_{ce}(sat)$ during the time the transistor is on.

The power dissipation during the *on* time is, therefore:

$$P_{D(on)} = I_{C(sat)}V_{CE(sat)}$$

The transistor is on for a short time, *t*on, and off for the rest of the input cycle. Therefore, assuming the entire load line is used, the power dissipation averaged over the entire cycle is:

$$P_{D(ave)} = \left(\frac{t_{on}}{T}\right) P_{D(on)} = \left(\frac{t_{on}}{T}\right) I_{C(sat)} V_{CE(sat)}$$

8. A Class C power amplifier is driven by a 200 kHz signal. The transistor is on for 1 µs, and the amplifier is operating over 100 percent of its load line.

   a. If $I_{c(sat)}$ = 100 mA and $V_{CE(sat)}$ = 0.2 V, what is the average power dissipation of the transistor in the circuit? [4 marks]

   b. Suppose the Class C amplifier described in part (a) has a V_{CC} equal to 24 V and the resistor R_C is 100 Ω. Determine the efficiency of the amplifier circuit. [4 marks]

Solution

a. For the given Class C amplifier, the period of conduction is given as:

$$T = \frac{1}{f_s} = \frac{1}{200\ \text{kHz}} = 5\ \mu\text{s}$$

Therefore, the average power dissipation of the amplifier is:

$$P_{D(ave)} = \left(\frac{t_{on}}{T}\right) I_{C(sat)} V_{CE(sat)} = \left(\frac{10^{-6}}{5 \times 10^{-6}}\right)(100\ \text{mA})(0.2\ \text{V}) = 4\ \text{mW}$$

The low power dissipation of the transistor operated in Class C is important because, as you will see later, it leads to a very high efficiency when it is operated as a tuned Class C amplifier in which relatively high power is achieved in the resonant circuit.

b. For the given Class C amplifier, from part (a), we know that the average power dissipation, $P_{D(ave)} = 4\ \text{mW}$. As a result, the output power of the amplifier is:

$$P_o = \frac{0.5 V_{CC}^2}{R_C} = \frac{(0.5)(24\ \text{V})^2}{100\ \Omega} = 2.88\ \text{W}$$

Therefore

$$\eta = \frac{P_o}{P_o + P_{D(ave)}} = \frac{2.88\ \text{W}}{2.88\ \text{W} + 4\ \text{mW}} = 0.999$$

Or, as a percentage the efficiency of the amplifier is 99.9 %.

E. Class D Amplifier

9. Class-D audio power amplifiers work by generating a train of rectangular pulses of fixed amplitude but varying width and separation, or varying number per unit time, representing the amplitude variations of the analogue audio input signal.

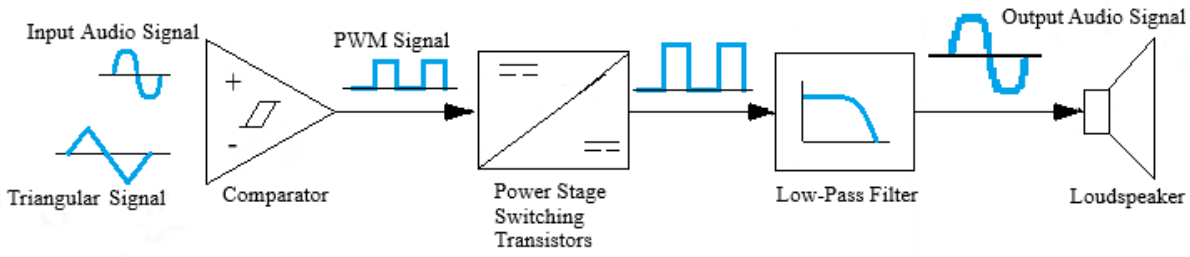

a. Describe the mechanism of the operation of a Class D audio amplifier. [10 marks]

b. State the major advantage of Class D amplifier for audio amplifier application compared with other power amplifiers. [5 marks]

Solution

a. Class-D audio amplifiers work by generating a train of rectangular pulses of fixed amplitude but varying width and separation, or varying number per unit time, representing the amplitude variations of the analogue audio input signal.

From the diagram given below, the analogue audio input signal is modulated with a reference triangle-wave.

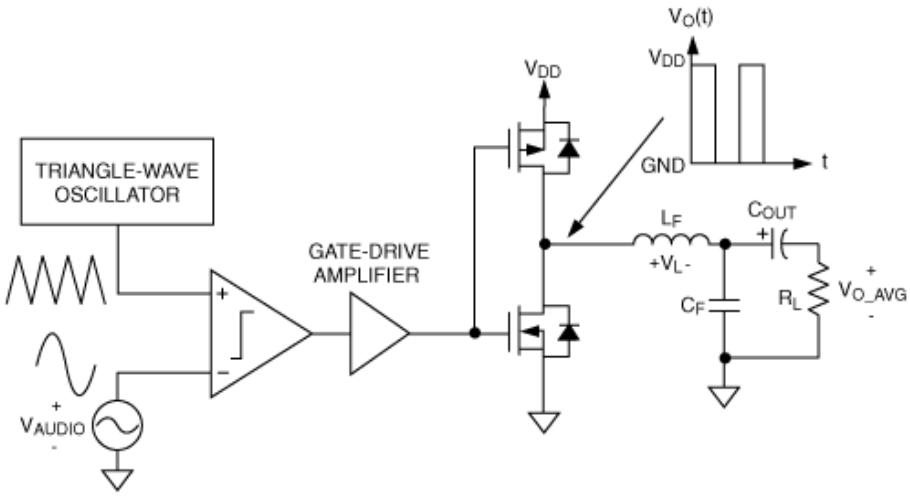

The output of the modulator is then used to gate the output transistors on and off alternately.

The design of the audio amplifier should ensure that the pair of transistors are never allowed to conduct together, as this would cause a short circuit between the supply rails through the transistors.

Since the transistors are either fully "on" or fully "off", they spend very little time in the linear region, and dissipate very little power. This is the main reason for the Class D audio amplifier's high efficiency.

In the output of the circuit, a simple low-pass filter consisting of an inductor and a capacitor provides a path for the low frequencies of the audio signal, leaving the high-frequency pulses behind.

b. The major advantage of a Class-D amplifier for audio amplifier application is that it can be more efficient than a linear amplifier, with less power dissipated as heat in the active devices.

Given that large heat sinks are not required, Class-D amplifiers are also much lighter weight than Class A, B, or AB amplifiers, an important consideration with portable electronic devices.

10. Given the output stage of a Class D power amplifier circuit as shown in the figure below. The amplifier operates transistors M_1 and M_2 as complementary switches— which are either completely turned on or completely turned off with a PWM gate signal—which are generated by comparing the sinusoidal reference (or input) signal voltage v_r with a triangular wave carrier signal v_{cr}.

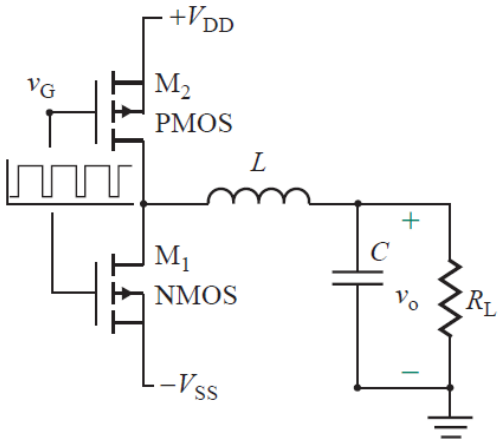

a. Describe the technique used to generate the PWM waveform in the Class D power amplifier circuit. Derive equation for calculating the modulation of the PWM signal. [6 marks]

b. Derive the transfer function equation in the frequency domain of the LCR low-pass filter circuit in the polar form. Describe the frequency response at high and low frequencies. How do you minimise the ripples in this power amplifier circuit? [8 marks]

c. The gate voltage of the Class D amplifier is generated by modulating a sinusoidal reference V_r = 1 V at f_r = 20 kHz with a carrier signal V_{cr} = 1 V at $f_{cr} = 30f_s$. The DC supply voltages are V_{DD} = ±5 V. The load resistance R_L= 8 Ω in the form of a speaker. Determine the values of L and C to form a tuned resonant circuit. [6 marks]

Solution

a. The technique for the generation of the PWM waveform is shown in the figure below, which can be implemented with an op-amp comparator.

When the gate–source voltage is positive, the NMOS is switched on while the PMOS is turned off, and the voltage at the transistor drain is $+V_{DD}$.

When the gate–source voltage is negative, the PMOS is switched on while the NMOS is turned off, and the transistor output is $-V_{ss}$.

The output voltage at the drain terminal is a pulsed waveform switching between $+V_{DD}$ and $-V_{SS}$ at the carrier frequency f_{cr}, which is a multiple (in the range of 10 to 30) of the signal frequency f_s.

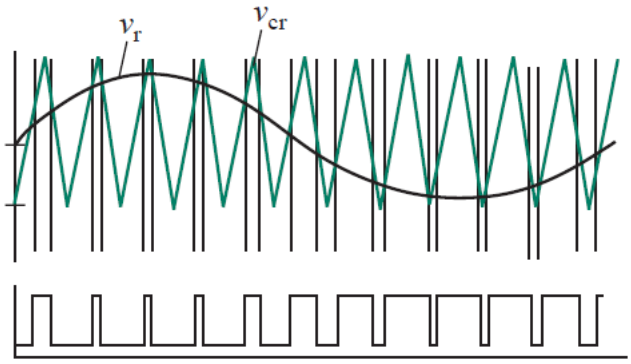

The pulse width of the modulated output depends on the ratio of the peak reference signal to the peak carrier signal, commonly known as the modulation index, m as given by:

$$m = \frac{V_r}{V_{cr}}$$

b. Since the PWM waveform was generated from a sinusoidal reference signal, a low-pass LC filter as shown in the figure below is used to restore the original sinusoidal component from the high-frequency modulated voltage. One additional LC filter may be used to reduce the amount of distortion.

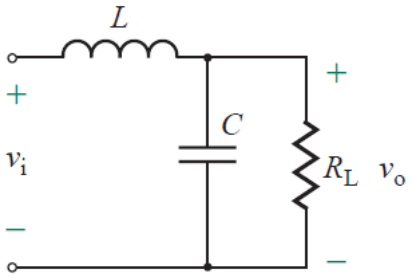

The characteristic of the LC filter can be determined from the input–output relationship in the Laplace's domain of s as given by:

$$G_f(s) = \frac{V_0(s)}{V_i(s)} = \frac{\omega_n^2}{s^2 + 2\zeta\omega_n s + \omega_n^2}$$

Where: the natural resonant frequency is $\omega_n = 1\sqrt{LC}$, and the damping factor $\zeta = (1/2R)\sqrt{L/C}$.

By substituting in the equation above, we can find the filter transfer function in the frequency domain as given by:

$$G_f(s) = \frac{\omega_n^2}{s^2 + 2\zeta\omega_n s + \omega_n^2} = \frac{\omega_n^2}{\omega_n^2 - \omega^2 + j\omega 2\zeta\omega_n}$$

which can be expressed in polar form with normalized frequency ratio $u = \omega/\omega_n$ as given by:

$$G_f(j\omega) = \frac{1}{1 - u^2 + j2\zeta u} = \frac{1}{\sqrt{(1-u^2)^2 + (2\zeta u)^2}} \angle \tan^{-1}\left(\frac{1-u^2}{2\zeta u}\right)$$

which shows that $u = \omega/\omega_n$ affects the amount of phase shift present at the output.

A high ω_n will decrease the phase shift, whereas a low ω_n will increase it. To minimize the amount of ripple present at the output, ω_n must be smaller than the carrier frequency $\omega_{cr} = 1/2\pi f_{cr}$, and it should ideally be equal to the reference frequency $\omega_r = 2\pi f_r$.

c. For the given Class D amplifier, the lower-order harmonic component is:

$$f_L = 2f_s = 2(20 \times 10^3) = 40 \times 10^3 \text{ Hz}$$

For the impedance of the filter capacitor, C must be much smaller than R_L, so that the higher-order harmonic components pass through C.

For a maximum power transfer at the load, the impedance of the capacitor at the cut off frequency of the filter should be equal to load resistor:

$$R_L = X_C = \frac{1}{\omega_L C}$$

Using a 10:1 ratio, we can write $R_L \gg 1/(2\pi f_L C)$, or:

$$C = \frac{10}{2\pi f_L R_L} = \frac{10}{2\pi(40 \times 10^3)(8)} \cong 2.5\ \mu\text{F}$$

For the given second-order LC filter circuit, its cut-off frequency is:

$$\omega_{LC} = \frac{1}{\sqrt{LC}}$$

Let us make the filter cut-off frequency $f_n = f_L = 1/\left(2\pi\sqrt{LC}\right)$, which gives L for C = 2.5 µF as:

$$L = \frac{1}{C(2\pi f_n)^2} = \frac{1}{(2.5 \times 10^{-6})(2\pi \times 40 \times 10^3)^2} \cong 6.4\ \mu\text{H}$$