XMUT303 Analogue Electronics

Tutorial 5: Power Amplifiers

A. Power Amplifiers

1. For classes of power amplifier circuits given below, describe each of the power amplifier classes in terms of their circuits, output signals with regard to input signals and Q-point biasing requirements of the transistor.
   a. Class A. [5 marks]
   b. Class B. [5 marks]
   c. Class AB. [5 marks]
   d. Class C. [5 marks]
   e. Class D. [5 marks]

2. For Class A, Class B, Class AB, Class C, and Class D power amplifiers, compare these classes of power amplifier in terms of:
   a. The conduction angle of the transistor used in the circuit. [10 marks]
   b. The efficiency of the amplifier. [6 marks]

B. Class A Amplifier

3. For a Class A power amplifier circuit in the figure given below that has an input voltage that results in a base current of 10 mA peak, calculate the following:
   a. Q-point of the biasing circuit. [10 marks]
   b. Input power of the amplifier. [2 marks]
   c. Output power of the amplifier. [4 marks]
   d. Efficiency of the amplifier. [2 marks]

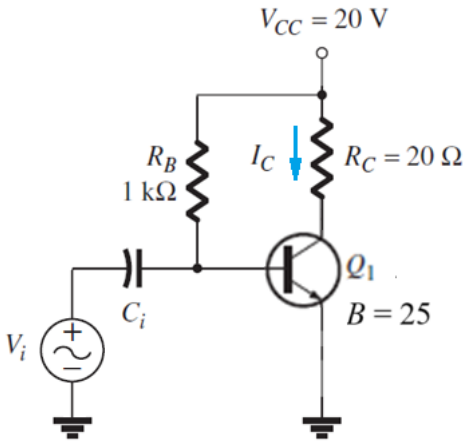

C. Class B Amplifiers

4. For a Class B power amplifier providing a 20-V peak signal to a 16-Ω load (speaker) and a power supply of V_{CC} = 30 V, determine:
   a. The input power of the amplifier. [6 marks]
   b. The output power of the amplifier. [2 marks]
   c. The circuit efficiency of the amplifier. [2 marks]

5. Class AB power amplifier or push-pull Class B power amplifier introduces some improvements towards design of Class B power amplifier.
   a. Describe the crossover distortion problem which is typically associated with the operation of Class AB amplifier. [10 marks]
   b. Describe the method to deal with the crossover distortion problem. [5 marks]
   c. Describe the circuit and operations of the resistors compensated biasing for the Class AB amplifier circuit. [10 marks]
   d. Describe the circuit and operations of the diodes compensated biasing for the Class AB amplifier circuit. [10 marks]
   e. Describe op amp feedback improvement introduced of the Class AB amplifier for eliminating the crossover distortion. [10 marks]

6. For a Class AB power amplifier circuit as shown in the figure below, assume that the circuit is a preamplifier stage with an output signal voltage of 3 V rms and an output resistance of 50 Ω is driving the push-pull power amplifier. Transistors Q_1 and Q_2 in the power amplifier have a β_{ac} of 100 and an r_e' of 1.6 Ω.
   a. Determine the maximum ideal peak values for the output voltage and current of the amplifier. [4 marks]
   b. Find the maximum ac output power and the dc input power of the amplifier. [4 marks]

c. Determine the loading effect that the power amplifier has on the preamp stage. [6 marks]

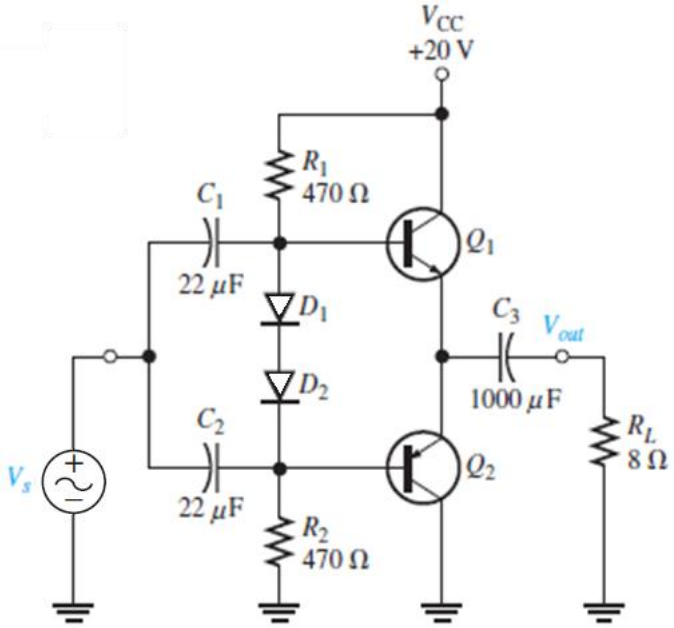

D. Class C Amplifier

7. For a given Class C power amplifier circuit as shown in the figure below, it is realised as a common-emitter amplifier with a resistive load.

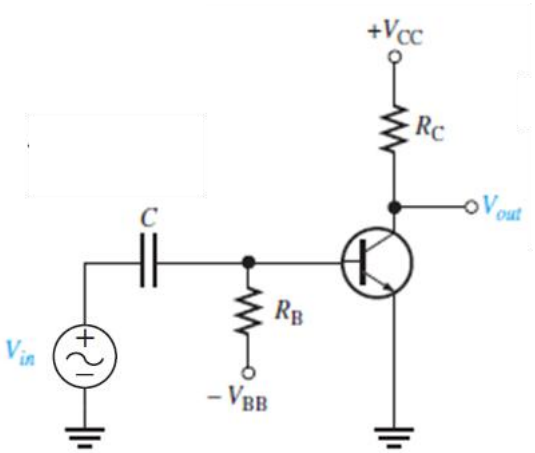

a. Describe basic operation of the amplifier. [5 marks]

b. Describe power dissipation of the amplifier. [5 marks]

c. State expressions that describe the power dissipation of the amplifier. [6 marks]

8. A Class C power amplifier is driven by a 200 kHz signal. The transistor is on for 1 μs, and the amplifier is operating over 100 percent of its load line.

a. If $I_{c(sat)}$ = 100 mA and $V_{CE(sat)}$ = 0.2 V, what is the average power dissipation of the transistor in the circuit? [4 marks]

b. Suppose the Class C power amplifier described in part (a) has a V_{CC} equal to 24 V and the resistor R_C is 100 Ω. Determine the efficiency of the amplifier circuit. [4 marks]

E. Class D Amplifier

9. Class-D audio power amplifiers work by generating a train of rectangular pulses of fixed amplitude but varying width and separation, or varying number per unit time, representing the amplitude variations of the analogue audio input signal.

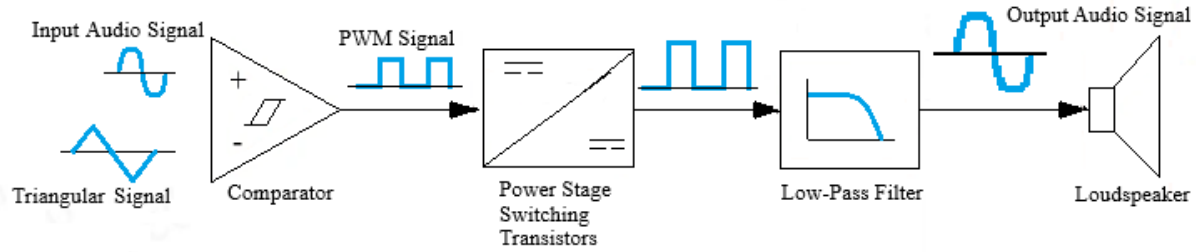

a. Describe the mechanism of the operation of a Class D audio amplifier. [10 marks]

b. State the major advantage of Class D amplifier for audio amplifier application compared with other classes of power amplifier. [5 marks]

10. Given the output stage of a Class D power amplifier circuit as shown in the figure below. The amplifier operates transistors M_1 and M_2 as complementary switches— which are either completely turned on or completely turned off with a PWM gate signal—which are generated by comparing the sinusoidal reference (or input) signal voltage v_r with a triangular wave carrier signal v_{cr}.

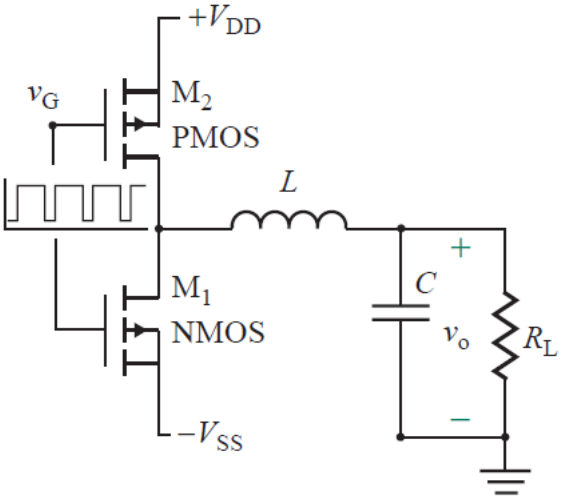

a. Describe the technique used to generate the PWM waveform in the Class D power amplifier circuit. Derive equation for calculating the modulation of the PWM signal. [6 marks]

b. Derive the transfer-function equation in the frequency domain of the LCR low-pass filter circuit in the polar form. Describe the frequency response at high and low frequencies. How do you minimise the ripples in this power amplifier circuit? [8 marks]

c. The gate voltage of the Class D amplifier is generated by modulating a sinusoidal reference V_r = 1 V at f_r = 20 kHz with a carrier signal V_{cr} = 1 V at f_{cr} = 30f_s. The DC supply voltages are V_{DD} = ±5 V. The load resistance R_L= 8 Ω in the form of a speaker. Determine the values of L and C to form a tuned resonant circuit. [6 marks]