XMUT303 Analogue Electronics

Tutorial 6: Power Supplies (Solution)

A. Linear Voltage Regulators

1. For a linear power supply in the circuit of the figure given below, it takes its input from an AC supply. The power supply consists of a full-wave rectifier and a low-pass filter circuits and is connected to a 5 kΩ load resistor.

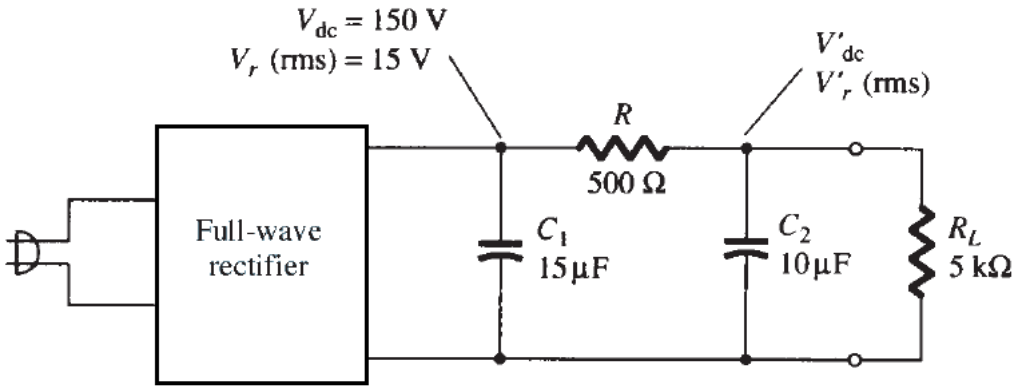

a. Calculate the DC and AC components of the output signal across load R_L. [6 marks]

b. Calculate the percentage of the ripple in the output waveform. [4 marks]

Solution

a. For the DC and AC components of the output signal across load resistor R_L:

DC Calculation

We obtain the DC voltage of the circuit from:

$$V'_{dc} = \left(\frac{R_L}{R + R_L}\right) V_{dc} = \left(\frac{5\ \text{k}\Omega}{500 + 5\ \text{k}\Omega}\right) \times 150\ \text{V} = 136.4\ \text{V}$$

AC Calculation

For full-wave rectifier f = 2 x 50 Hz = 100 Hz, the RC-section capacitive impedance is:

$$X_c = \frac{1}{\omega C} = \frac{1}{2\pi \times 2 \times 50 \times 10 \times 10^{-6}} = 0.159\ \text{k}\Omega = 159\ \Omega$$

Knowing $V_r(\text{rms})$ = 15 V, the AC component of the output voltage, calculated using the equation below, is:

$$V'_{rms} = \left(\frac{X_c}{R}\right) V_r(\text{rms}) = \left(\frac{159}{500}\right) \times 15\ \text{V} = 4.77\ \text{V}$$

b. The percentage of the ripple of the output waveform is then:

$$\Delta V = \left(\frac{V'_r(\text{rms})}{V'_{dc}}\right) \times 100\% = \left(\frac{4.77\ \text{V}}{136.4\ \text{V}}\right) \times 100\% = 3.5\ \%$$

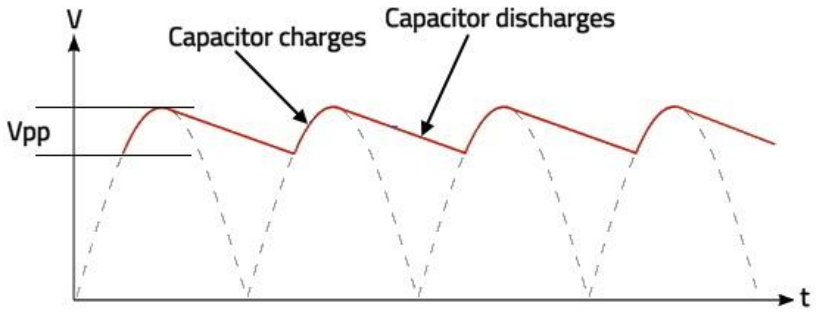

2. For a given series linear voltage regulator circuit given in the figure below, its reference voltage is based on a 12 V Zener diode.

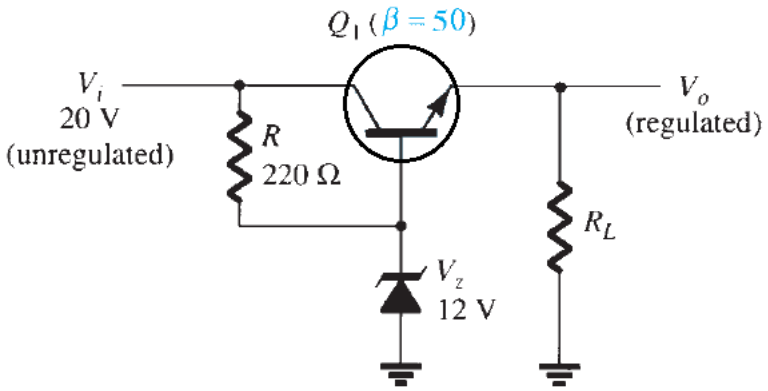

a. Calculate the output voltage and voltage across collector and emitter of transistor. [4 marks]

b. Calculate the Zener current in the regulator circuit for R_L = 1 kΩ. [8 marks]

Solution

a. For the given voltage regulator, the output voltage is:

$$V_0 = V_z - V_{BE} = 12\ \text{V} - 0.7\ \text{V} = 11.3\ \text{V}$$

The voltage across the collector and emitter of the transistor:

$$V_{CE} = V_i - V_o = 20\text{ V} - 11.3\text{ V} = 8.7\text{ V}$$

b. The voltage across the biasing resistor:

$$I_R = \frac{20\text{ V} - 12\text{ V}}{220\ \Omega} = \frac{8\text{ V}}{220\ \Omega} = 36.4\text{ mA}$$

For load resistor, R_L = 1 kΩ, the current that flows in the load resistor:

$$I_L = \frac{V_o}{R_L} = \frac{11.3\text{ V}}{1\text{ k}\Omega} = 11.3\text{ mA}$$

The current that flows in the biasing resistor:

$$I_B = \frac{I_C}{\beta} = \frac{11.3\text{ mA}}{50} = 226\ \mu\text{A}$$

The current that flows in the Zener diode:

$$I_z = I_R - I_B = 36.4\text{ mA} - 226\ \mu\text{A} \approx 36\text{ mA}$$

3. For a shunt voltage regulator circuit given below, its reference voltage is derived from a 120 Ω sensing resistor and 8.2 V Zener diode.

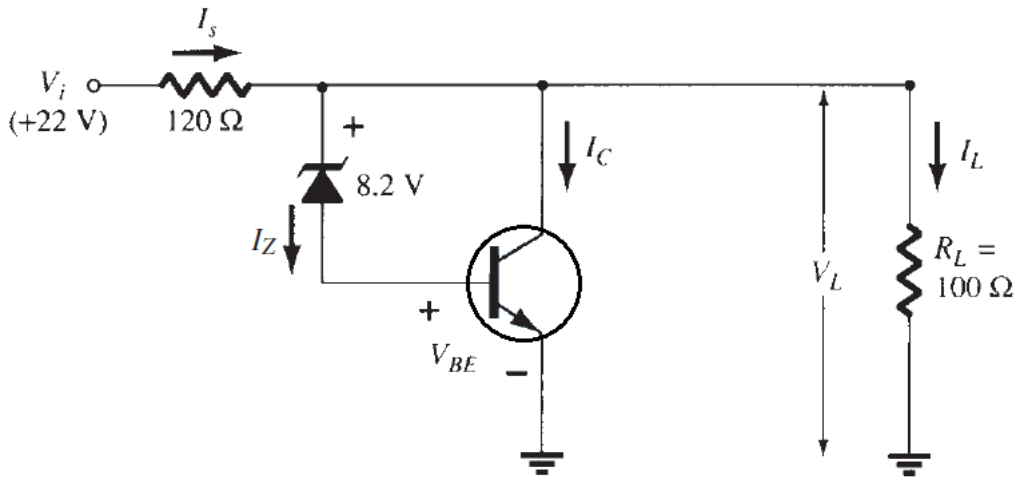

a. Determine the regulated voltage across the load resistor. [4 marks]

b. Determine the currents in the circuit. [6 marks]

Solution

a. The load voltage is found using the following equation:

$$V_L = V_Z + V_{BE}$$

Entering the values into the equation, the voltage across the load is found to be:

$$V_L = 8.2\ \text{V} + 0.7\ \text{V} = 8.9\ \text{V}$$

b. For the given load, the current that flows in the load is:

$$I_L = \frac{V_L}{R_L} = \frac{8.9\ \text{V}}{100\ \Omega} = 89\ \text{mA}$$

With the unregulated input voltage at 22 V, the current through R_S is:

$$I_S = \frac{V_i - V_L}{R_S} = \frac{22\ \text{V} - 8.9\ \text{V}}{120\ \Omega} = 109\ \text{mA}$$

So that the collector current is

$$I_C = I_S - I_L = 109\ \text{mA} - 89\ \text{mA} = 20\ \text{mA}$$

The current through the Zener diode and transistor base-emitter is smaller than I_C by the transistor beta.

4. For a fixed-voltage regulator-based power supply circuit given below, it is based on 7805 integrated circuit.

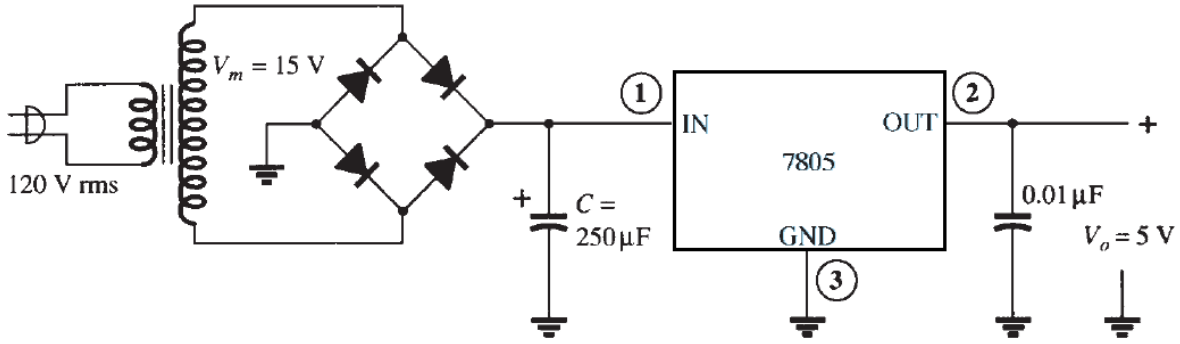

a. Determine the maximum value of load voltage at which regulation is maintained. [4 marks]

b. Sketch the approximate triangular ripple input voltage of the filter capacitor. [5 marks]

c. Calculate the root mean square value of the ripple input voltage of the regulator. [4 marks]

d. Calculate the value of DC current in the input. [2 marks]

Solution

a. From datasheet of the 7805 fixed voltage regulator IC, to maintain minimum input voltage, $V_i(\text{min}) \geq 7.3\ \text{V}$,

$$V_r(\text{p}) \leq V_m - V_i(\text{min}) = 15\ \text{V} - 7.3\ \text{V} = 7.7\ \text{V}$$

The ripple voltage of the filter capacitor and hence its value are estimated using this method.

The value of the rms voltage of ripple voltage of the filter capacitor ($V_r(\text{rms})$) is derived from the triangular waveforms of the peak-to-peak output voltage of the bridge diodes rectifier, V_m.

b. The following diagram shows the approximate triangular ripple voltage of the filter capacitor.

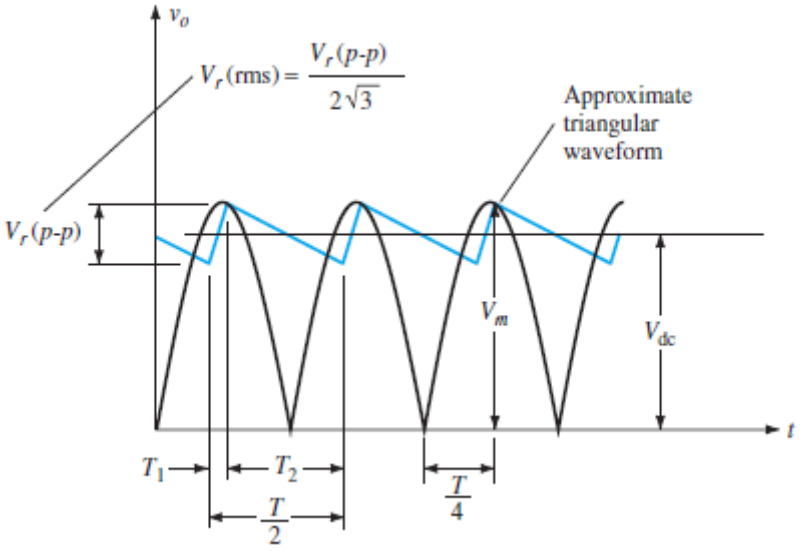

c. The rms value of the ripple voltage of the input filter capacitor ($V_r(rms)$).

$$V_r(\text{rms}) = \frac{V_r(\text{p}-\text{p})}{2\sqrt{3}} \qquad \text{or} \qquad V_r(rms) = \frac{V_r(\text{p})}{\sqrt{3}}$$

So that the ripple voltage of the regulator (in rms):

$$V_r(\text{rms}) = \frac{V_r(\text{p})}{\sqrt{3}} = \frac{7.7\ \text{V}}{1.73} = 4.4\ \text{V}$$

d. The value of the DC current (I_{dc}) in the input is then:

$$I_{dc} = \frac{V_r(\text{rms})C}{\sqrt{2}\sqrt{3}} = \frac{(4.4\ \text{V})(250 \times 10^{-6})}{2.4} = 458\ \text{mA}$$

Thus, any current above this value is too large for the circuit to maintain the regulator output at +5 V.

5. For a variable voltage regulator circuit as in the figure given below, it is based on LM317 integrated circuit.

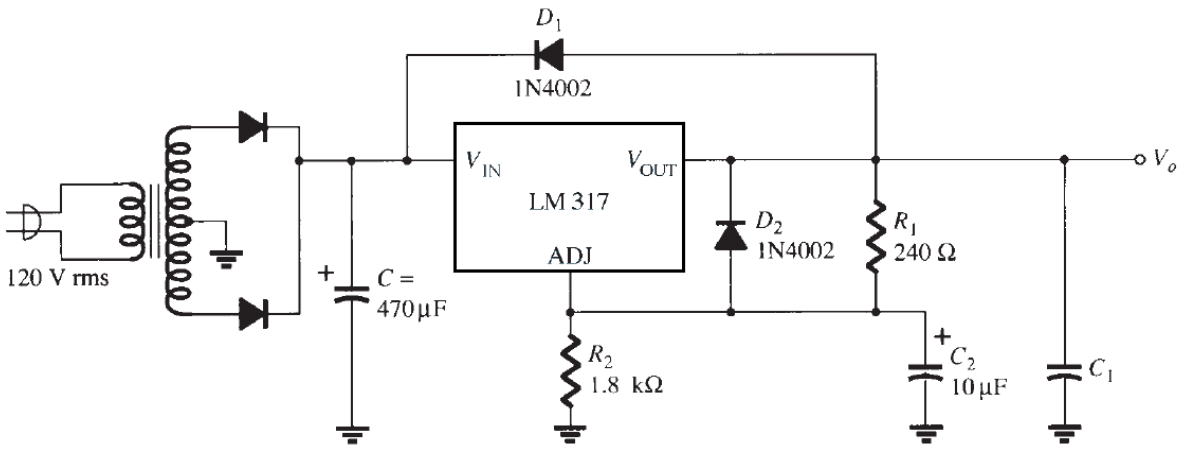

a. Derive the equation for determining the regulated output voltage (V_o). [4 marks]

b. Determine the regulated output voltage of the circuit. [4 marks]

Solution

a. From datasheet of LM317 variable voltage regulator IC, the output voltage of the regulator (V_o) is calculated using the equation below.

$$V_o = V_{ref}\left(1 + \frac{R_2}{R_1}\right) + I_{adj}R_2$$

Note: range of allowable input voltage that for LM317 is 1.2 V - 37 V.

b. Entering the values into the equation, for typical values of V_{ref} = 1.25 V and I_{adj} = 100 μA, the output voltage of the regulator is found from:

$$V_o = 1.25\ V\left(1 + \frac{1.8\ \text{k}\Omega}{240\ \Omega}\right) + (100\ \mu\text{A})(1.8\ \text{k}\Omega) \approx 10.8\ \text{V}$$

A check of the filter capacitor voltage (C_1) shows that an input–output difference of 2 V can be maintained up to at least 200 mA load current.

B. Transformer and Inductor

6. Design a line transformer for a low power application operating at a primary voltage of 230-V (rms) at a frequency of 50 Hz and output voltage of 18 V. The core for our example has a cross-sectional area of 8 mm x 8 mm, and a maximum flux density of 1.3 T.



a. Determine the maximum flux of the transformer. [6 marks]

b. Derive the equation for determining the average output voltage and calculate its value. [10 marks]

c. Determine the required number of turns of the secondary winding. [8 marks]

d. State two assumptions related to power transfer determination of small transformer. [4 marks]

e. Determine the winding window area and copper area of the transformer. [8 marks]

f. Calculate the resistance of the windings of the transformer. [10 marks]

g. Determine the power loss and rated power of the transformer. [4 marks]

Solution

a. For magnetic determination, the cross-sectional area of the core (A_{core}) is given as:

$$A_{\text{core}} = 0.008 \times 0.008 = 6.4 \times 10^{-5}\ \text{m}^2$$

The maximum flux in the core (Φ) is calculated as:

$$\Phi = B \cdot A_{\text{core}} = 1.3 \times 6.4\ \times 10^{-5} = 8.32 \times 10^{-5}\ \text{Wb}$$

The maximum flux change in the core however is double, as the core may be magnetised in both directions, i.e. 16.64 x 10^{-5} Webber.

b. We need to work out the input voltage first. Considering a sinusoidal input voltage from the main, the average input voltage is determined from:

$$V_{\text{ave}} = \frac{1}{\pi}\int_0^{\pi} V_p \cdot \sin(\omega t)dt$$

Taking the integral of the given equation:

$$V_{\text{ave}} = \frac{V_p}{\pi}[-\cos(\omega t)]_0^{\pi}$$

If the input voltage in the primary winding is given by $V(t) = V_p \cdot \sin(\omega t)$, then the average voltage may be derived as follows:

$$\cos(0) = 1 \qquad \text{and} \qquad \cos(\pi) = -1$$

Hence:

$$V_{\text{ave}} = \frac{2V_p}{\pi}$$

For our example, the average voltage is computed as:

$$V_{\text{ave}} = \frac{2 \cdot 230 \cdot \sqrt{2}}{\pi} = 207 \text{ V}$$

c. The number of turns (N) required to obtain this flux as in part (a) is given by:

$$N = \frac{V \cdot t}{\Phi}$$

Where: V_{ave} is the average voltage applied to the winding.

The required number of turns (N_p) is computed as:

$$N_p = \frac{207 \times 0.01}{16.64 \times 10^{-5}} = 1{,}244 \text{ turns}$$

Hence, expressed in terms of volt/turn, we have 0.166 volts per turn, or 6.024 turns per volt.

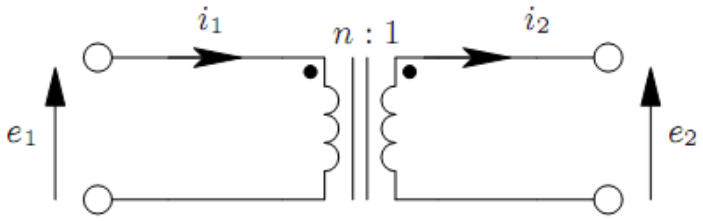

For the secondary winding, the required number of turns (N_s) is then simply calculated by multiplying 6.204 by the desired voltage. If the required secondary voltage is 18 V (which may be suitable for a 12 V linear regulated supply), the required number of turns will be:

$$N_s = 6.204 \cdot 18 = 108.4 \text{ turns}$$

d. For transfer power determination, for small transformers however, it is usually safe to make some assumptions based on experience.

- An efficiency of 90%, i.e. a loss of 10% is acceptable without the risk of overheating the transformer.
- The primary limiting factor is the heating of the windings that is the copper losses (I^2R).

e. For a given core, there will be a given window available for the windings. The core used in the winding example has a window of:

$$A_w = 8 \text{ mm} \times 8 \text{ mm}$$

Additionally, the distance around the core is (assuming symmetrical distance around the periphery of the core):

$$4 \times 8 = 32 \text{ mm}$$

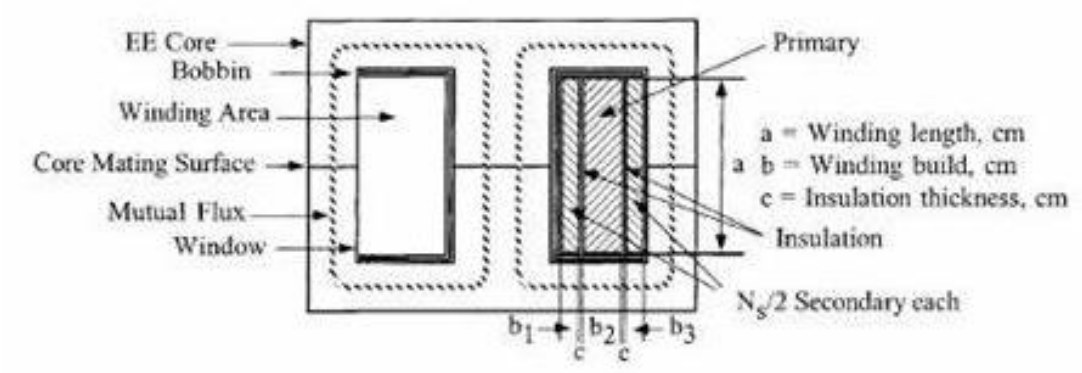

So, the copper area of the transformer is:

$$A_{cu} = 31 \times 8 = 248 \text{ mm}^2 = 2.48 \text{ cm}^2$$

It is often assumed that a fill factor of 40% which is about 40% of the core window is used for copper, the rest being used for insulation and air. This gives us a copper area of:

$$A_{cu} = 2.48 \times 0.4 = 0.992 \text{ cm}^2$$

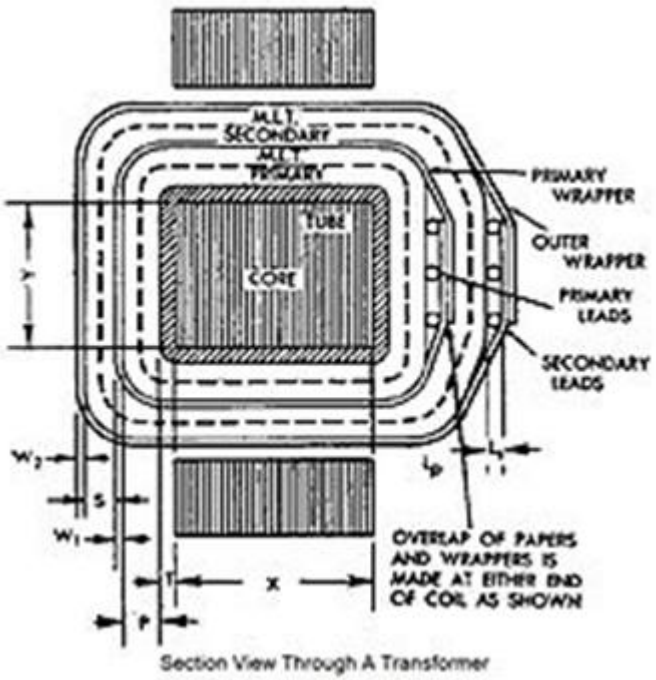

Section View Through A Transformer

f. The primary winding is given half of this area, i.e. the wire cross sectional area is given as:

$$A_{cu(primary)} = \frac{6.44 \times 10^{-5}}{1244} = 0.0518 \text{ mm}^2$$

Copper has a resistivity, $\rho = 1.68 \times 10^{-8}\ \Omega/\text{m}$, and the resistance of the winding is given by:

$$R = \rho \times \frac{l}{A}$$

If the average turn length is [(24 x 4) mm + (4 x 8) mm]/2 = 64 mm, the total length is about 64 mm x 1244 = 79.616 m.

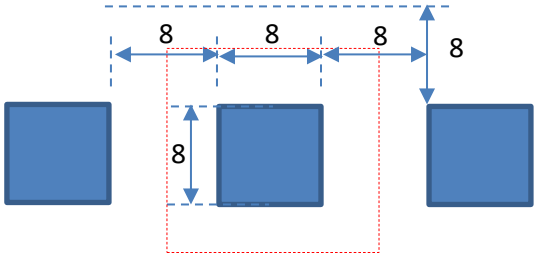

The winding resistance is then given as:

$$R = \frac{1.68 \times 10^{-8} \times 79.616}{0.0518 \times 10^{-6}} = 25.82\ \Omega$$

g. As previously stated, we will allow a power loss of 10%, i.e. the primary winding will be allowed a loss of 5%.

$$P_{loss} = \frac{V^2}{R} = \frac{230 \times 0.05}{25.82} = 0.445\ \text{W}$$

The rated input power of the transformer is then computed as:

$$P_{in} = \frac{P_{loss}}{(1-\eta)} = \frac{0.445}{0.1} = 4.45\ \text{W}$$

7. You are given the task of designing an inductor for a switching converter operating at 20 kHz, with a 42% duty cycle and supply voltage of 230 V (rms). The magnetic material core is a toroid inductor that has a cross-sectional area of 2 cm^2. From the manufacturer datasheet of the magnetic core, it is suggested a maximum flux density of 0.055 Tesla at the frequency of operation.

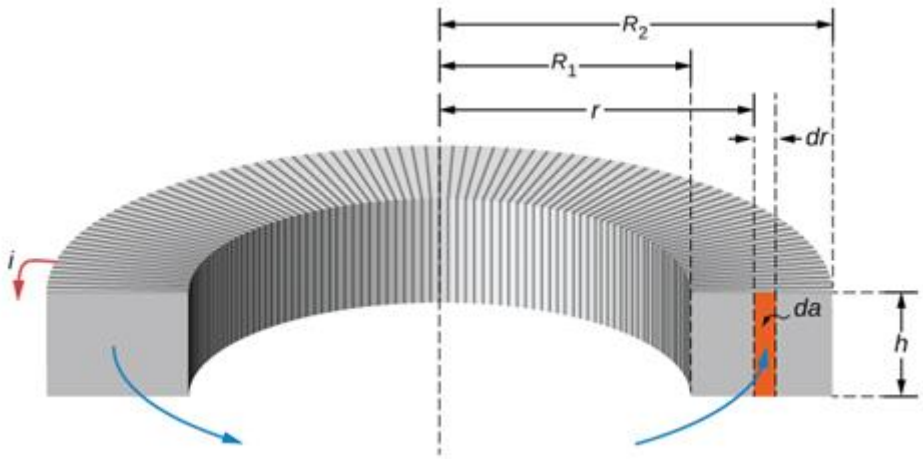

Where: inner radius R_1, outer radius R_2, average radius, r, and height, h, determine:

a. The inductance of inductor. [8 marks]

b. The transfer power of inductor. [6 marks]

c. The quality factor of the inductor. [4 marks]

Solution

a. For inductance of inductor determination, the maximum flux in the core is given as:

$$\Phi = B \cdot A = 0.055 \times 2 \times 10^{-4} = 11\ \mu\text{Wb}$$

If the input voltage is 230 V (rms) rectified, i.e. 325 V (peak), the required number of primary turns is given as:

$$N = \frac{V \cdot t}{\Phi} = \frac{325 \times 0.42 \times 50 \times 10^{-6}}{11 \times 10^{-6}} = 620 \text{ turns}$$

The energy stored in the core depends on the inductance.

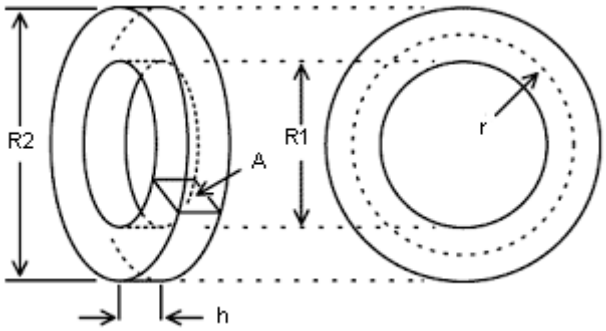

Typically, the manufacturer will supply a number (A_L), which when multiplied by the turns ratio squared, gives us the inductance. The inductance of a toroid core is approximately given by:

$$L \approx \frac{\mu N^2 A}{2\pi r} = \frac{10^{-4} \times (620)^2 \times 2 \times 10^{-4}}{2 \times \pi \times 0.8 \times 10^{-2}} = 0.153\ \text{H}$$

Where: A is the cross-sectional-area of the core, and r is the radius to the centerline of the core = 0.8 cm and μ is the relative permeability of ferrite = 10^{-4} H/m (note: it is the material of the inductor core).

b. For transfer power of the inductor determination, the current that flows in the inductor (I_L), ramping up with a peak current at the end of the on-cycle given by:

$$I_L = \frac{V \times t}{L} = \frac{325 \times 0.42 \times 50 \times 10^{-6}}{0.153} = 0.0446\ \text{A}$$

The energy stored in the core at each switching interval (W) is then given as:

$$W = V \times I \times t = 325 \times \left(\frac{0.0446}{2}\right) \times 0.42 \times 50 \times 10^{-6} = 152.2\ \mu\text{J}$$

As the frequency is 20 kHz, we will have 20,000 such intervals each second. Hence, the total energy transferred each second (e.g. transfer power of the inductor) is given as:

$$P = \frac{W}{t} = Wf = 152.2 \times 10^{-6} \times 2 \times 10^{4} = 3.04\ \text{J/s} = 3.04\ \text{W}$$

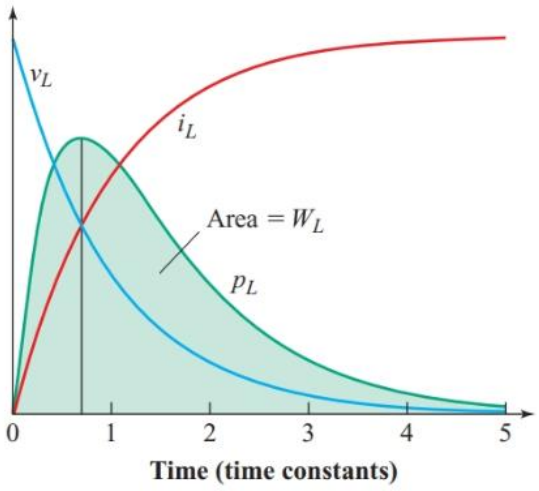

c. For quality factor determination, resistance in the inductor is given as (with resistivity of copper wire, $\rho = 1.68 \times 10^{-8}\ \Omega/m$, length of wire, $l = 65 \times 4\ \text{cm} = 2.3\ \text{m}$ and $A = 2 \times 10^{-4}$):

$$R = \rho \times \frac{l}{A} = 1.68 \times 10^{-8} \times \frac{2.3}{2 \times 10^{-4}} = 1.932 \times 10^{-4}\ \Omega$$

The quality factor of an inductor is given by:

$$Q_L = \frac{X_L}{R_L} = \frac{2\pi f L}{R_L} = \frac{2\pi \times 20 \times 10^{3} \times 0.153}{1.932 \times 10^{-4}} = 10^{7}$$

C. Switching Voltage Regulators

8. Design a step down (Buck) converter circuit as illustrated in the figure below with the following design specification: 24 V input source and a load of 12 V and 2 A. The switching frequency is at 100 kHz. The current ripple will be limited to 10% of maximum load.

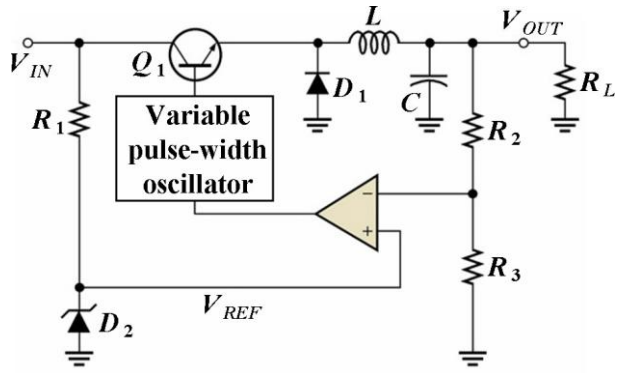

a. Determine the converter basic parameters (e.g. duty cycle and max. ripple voltage). [6 marks]

b. Calculate the required inductance of the inductor. [8 marks]

c. Calculate the output capacitor requirements. [14 marks]

d. Calculate the input capacitor requirements. [6 marks]

e. Determine and select the power diode. [4 marks]

f. Determine and choose the power transistor. [8 marks]

g. Calculate the converter overall efficiency. [6 marks]

Solution

a. Determining the step down (Buck) converter basic parameters is carried out as follows.

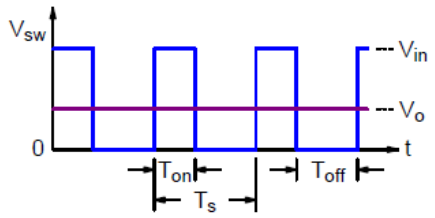

Calculate duty cycle (D) of the converter:

$$D = \frac{V_{out}}{V_{in}} = \frac{12\ \text{V}}{24\ \text{V}} = 0.5$$

Calculate ripple current (i.e. 10% of maximum load):

$$I_{ripple} = 0.1 I_{load} = (0.1)(2\ \text{A}) = 0.2\ \text{A}$$

The waveforms of Buck converter are shown below for continuous conduction mode. Notice that the current that flows in the circuit is continuous without any non-conduction period shown in the diagram.

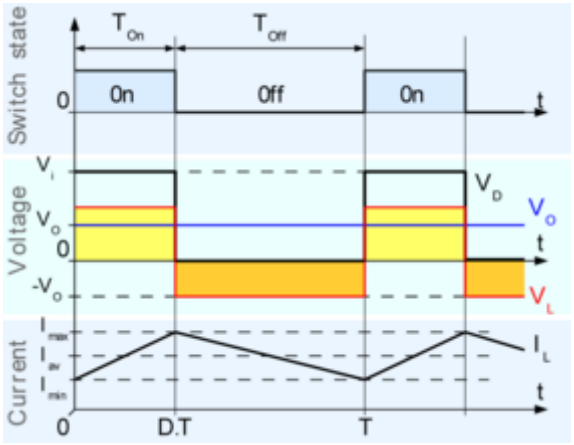

The following figure shows the waveforms for the discontinuous conduction mode of the Buck converter. Observe that the current that flows in the circuit is not continuous i.e. have a non-conduction period as shown in the diagram.

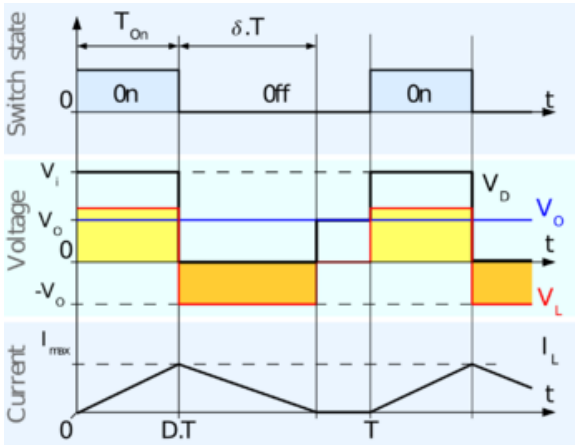

b. Calculating the inductance of the inductor is performed as follows.

For an inductor, the voltage across it is:

$$V = L\left(\frac{\Delta I}{\Delta T}\right)$$

Rearrange and substitute:

$$L = \frac{(V_{in} - V_{out})\left(\frac{D}{F_{sw}}\right)}{I_{ripple}}$$

Calculate the inductance of the inductor:

$$L = \frac{(24\ \text{V} - 12\ \text{V})\left(\frac{0.5}{100\ \text{kHz}}\right)}{(0.2\ \text{A})} = 300\ \mu\text{H}$$

Power loss due to inductor is given as:

$$P_{L(loss)} = LI_{out}^2 = (300 \times 10^{-6})(2\ \text{A})^2 = 0.0012\ \text{W}$$

c. Referring to a datasheet of the chosen model of capacitor in Appendix 1 for output capacitor, calculating the output capacitance is performed as follows.

For a capacitor, its ripple voltage is calculated from:

$$\Delta V = \Delta I\left(ESR + \frac{\Delta T}{C} + \frac{ESL}{\Delta T}\right)$$

Define ripple voltage: 50 mV. Given that: ΔI = 0.2 A, equivalent series resistance (ESR) = 0.03 Ω and ESL = 0

$$\Delta T = \frac{D}{f_{sw}} = \frac{0.5}{100\ \text{kHz}} = 5\ \mu\text{s}$$

Simplify (assume ESL = 0):

$$\Delta V = \Delta I \times \left(ESR + \frac{\Delta T}{C}\right)$$

Rearrange for the capacitance of the capacitor:

$$C = \frac{(\Delta I \times \Delta T)}{[\Delta V - (\Delta I \times ESR)]}$$

Calculate minimum value of output capacitor:

$$C_{out} = \frac{(0.2\text{ A})(5\text{ µsec})}{0.05\text{ V} - (0.2\text{ A} \times 0.03\ \Omega)} = 22.7\text{ µF (minimum)}$$

Choose for the output capacitor an electrolytic capacitor 47 µF, 25 V with ESR = 0.03 Ω.

The current in the output capacitor is calculated from:

$$I_{c_{out}\,(rms)} = \frac{\Delta I_L}{2\sqrt{3}} = \frac{(0.2\text{ A})}{2\sqrt{3}}$$

Output capacitor power losses can be found from:

$$P_{c\,(ESR)} = I^2_{c\,(\text{rms})}ESR = I^2_{c_{out}\,(\text{rms})}ESR = \left(\frac{0.1\text{ A}}{\sqrt{3}}\right)^2 (0.03\ \Omega) = 0.0001\text{ W}$$

d. Referring to a datasheet of the chosen model of capacitor in Appendix 2 for input capacitor, determining the input capacitor is worked out as follows.

Estimate input ripple current:

$$I_{ripple} \gg \frac{I_{load}}{2} = \frac{(2\text{ A})}{2} = 1\text{ A}$$

Define acceptable input ripple voltage: 200 mV (e.g. higher ripple factor in the input section compared with the output section). Select a capacitor ESR value: 0.12 Ω. Compute capacitance of input capacitor:

$$C_{in} = \frac{\Delta T}{\left(\frac{V_{ripple}}{I_{ripple}}\right) - ESR} = \frac{(5\text{ µsec})}{\left(\frac{200\text{ mV}}{1\text{ A}}\right) - 0.12\ \Omega} = 62.5\text{ µF}$$

Consult datasheet of capacitor manufacturer. An electrolytic capacitor with rating 63 µF, 50 V meets the ESR (0.12 Ω) and capacitance requirements.

The current in the input capacitor is calculated from:

$$I_{c_{in}\,(rms)} = I_{out}\left[\frac{\sqrt{(V_{in} - V_{out})V_{out}}}{V_{in}}\right] = (2\text{ A})\left[\frac{\sqrt{(24\text{ V} - 12\text{ V})(12\text{ V})}}{(24\text{ V})}\right] = 1\text{ A}$$

Input capacitor power losses can be found from:

$$P_{c\,(ESR)} = I^2_{c\,(\text{rms})}ESR = I^2_{c_{in}\,(\text{rms})}ESR = (1\text{ A})^2(0.12\ \Omega) = 0.12\text{ W}$$

e. Referring to a datasheet of the chosen diode in Appendix 3 for the freewheeling diode, diode selection is performed as follows:

Estimate diode current:

$$I_D = (1 - D)I_{load} = (1 - 0.5)(2\text{ A}) = 1\text{ A}$$

Where: D = Duty cycle

With maximum diode reverse voltage = 12 Volts, select 1N5820 diode with 20 V, 3 A low forward drop (Schottky) diode meets requirements. From datasheet forward voltage drop of the diode, $V_f = 0.475$ V.

Power dissipation of diode:

$$P_D = V_f I_D = (0.475\text{ V})(1\text{ A}) = 0.475\text{ W}$$

f. Referring to a datasheet of the chosen power transistor in Appendix 4 for the switching transistor, MOSFET selection is performed as follows.

By assuming 24 V input, 2 Amp load, D = 0.5, T_{rise} = T_{fall} = 50 ns, F_{sw} = 100 kHz, select P-channel MOSFET for ease of driving gate i.e. IRF7416PbF (i.e. PNP MOSFET, -30 V, -10 A, R_{ds} = 0.02 Ω).

Losses in the switching transistor are due to conduction losses when the transistor is on and switching losses during the transition change of operating levels (e.g. on-off condition).

The losses in the MOSFET transistor due to conduction is given as:

$$P_{conduction} = I_D^2 R_{ds}(hot)D = (2\text{ A})^2(0.02\ \Omega)(0.5) = 0.04\text{ W}$$

The power losses in the MOSFET transistor due to switching is given as:

$$P_{switching} = \left[V\left(\frac{I_D}{2}\right)\right](T_{on} + T_{off})F_{sw} + [(C_{oss}(V)^2 F_{sw})]$$

$$= \left[(12\text{ V})\left(\frac{2\text{ A}}{2}\right)\right](100\text{ nsec})(100\text{ kHz}) + [(890\text{ pF})(12\text{ V})^2(100\text{ kHz})]$$

$$= 0.12\text{ W} + 0.012\text{ W} = 0.132\text{ W}$$

As a result, the total power loss in the MOSFET transistor is:

$$P_{total} = P_{conduction} + P_{switching} = 0.4\text{ W} + 0.132\text{ W} = 0.532\text{ W}$$

In this example, either a P-channel or an N-channel MOSFET may be used. The choice will be based on cost and complexity issues.

g. Converter efficiency is determined as follows. First, the output power is:

$$P_{out} = VI = (12\text{ V})(2\text{ A}) = 24\text{ W}$$

For the total power losses in the converter, the total loss is:

$$P_{loss}(\text{total}) = P_{C(in)loss} + P_{MOSFETloss} + P_{Diodeloss} + P_{Inductorloss} + P_{C(out)loss}$$

$$= 0.12\text{ W} + 0.532\text{ W} + 0.475\text{ W} + 0.0012\text{ W} + 0.0001\text{ W} = 1.1283\text{ W}$$

The efficiency (η) of the converter is given as:

$$\eta = \frac{P_{out}}{P_{out} + P_{loss}(\text{total})} = \frac{24\ \text{W}}{(24\ \text{W} + 1.1283\ \text{W})} = 95.5\%$$

9. By referring to a step up (Boost) converter circuit given in the figure below, its operation is based on a variable pulse-width oscillator circuit.

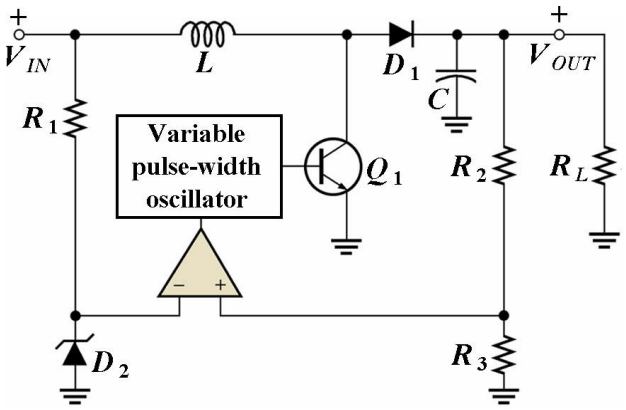

a. Describe the operation of the Boost converter. [10 marks]

b. Providing values of resistors are R_2 = 5 kΩ and R_3 = 10 kΩ, V_z = 5 V, and converter duty cycle is 0.24, calculate the voltage observed in the output (V_{out}) if input voltage is 48 V DC. [4 marks]

c. What is a continuous conduction mode and how is it different from the discontinuous conduction mode? [40 marks]

Solution

a. Operation of a step up (Boost) converter:

The key principle that drives the boost converter is the tendency of an inductor to resist changes in current by creating and removing a magnetic field.

In a Boost converter, the output voltage is always higher than the input voltage. A schematic of a Boost power stage is shown in the figure below.

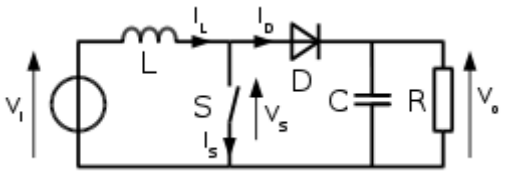

When the switch is closed, current flows through the inductor in clockwise direction and the inductor stores some energy by generating a magnetic field. Polarity of the left side of the inductor is positive.

When the switch is opened, current will be reduced as the impedance is higher. The magnetic field previously created will start to discharge to maintain the current towards the load.

Thus, the polarity will be reversed (meaning the left side of the inductor will become negative). As a result, two sources will be in series causing a higher voltage to charge the capacitor through the diode D.

If the switching cycle is fast enough, the inductor will not discharge fully in between charging stages, and the load will always see a voltage greater than that of the input source alone when the switch is opened.

While the switch is opened, the capacitor in parallel with the load is charged to this combined voltage.

When the switch is then closed and the right-hand side is shortened out from the left-hand side, the capacitor is therefore able to provide the voltage and energy to the load.

During this time, the blocking diode prevents the capacitor from discharging through the switch. The switch must of course be opened again fast enough to prevent the capacitor from discharging too much.

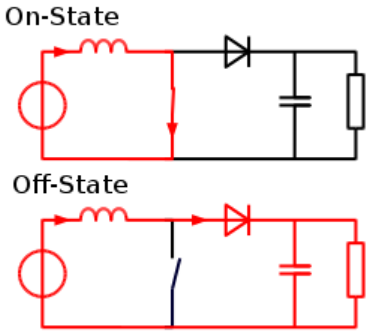

By referring to the figure given above, the basic principle of a Boost converter consists of two distinct states:

On-state - The switch S is closed, resulting in an increase in the inductor current.

Off-state - The switch is open and the only path offered to inductor current is through the flyback diode D, the capacitor C and the load R. This results in transferring the energy accumulated during the on-state into the capacitor.

The input current is the same as the inductor current as can be seen in figure given above. It is not discontinuous as in the Buck converter and the requirements on the input filter are relaxed compared to a Buck converter.

b. For output voltage calculation, knowing that R_2 = 5 kΩ and R_3 = 10 kΩ, and the input voltage is 48 V DC.

$$V_o = \left(\frac{R_3}{R_2 + R_3}\right) V_i = \left(\frac{10\ \text{k}\Omega}{5\ \text{k}\Omega + 10\ \text{k}\Omega}\right)(48\ \text{V}) = 32\ \text{V}$$

As a result, the output voltage of the Boost converter is 32 Volts.

c. For the given boost converter, there two types of mode of operation e.g. continuous conduction mode (CCM) vs. discontinuous conduction mode (DCM).

i. Continuous Conduction Mode (CCM)

Figure below shows the typical waveforms of inductor current and voltage in a Boost converter operating in this mode.

When the converter operates in continuous mode, the current through the inductor I_L never falls to zero.

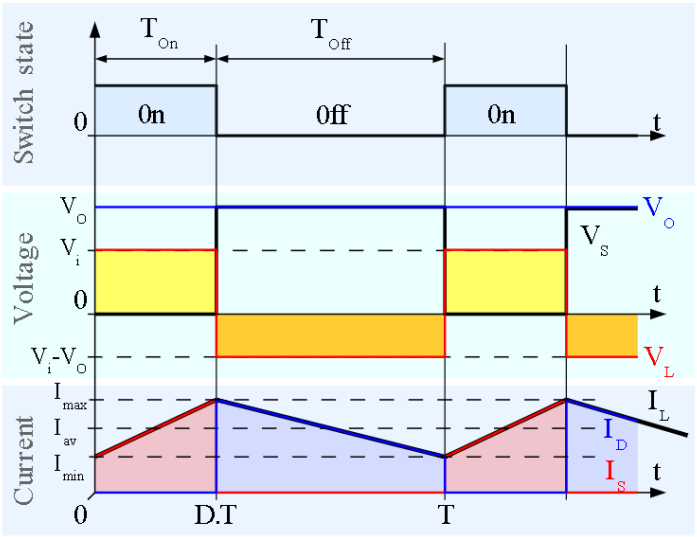

In the steady state, the DC (average) voltage across the inductor must be zero so that after each cycle the inductor returns the same state, because voltage across the inductor is proportional to rate of change of current through it.

Looking at the schematic diagram of the Boost converter that the left-hand-side of L is at V_i and the right-hand-side of L sees the V_s voltage waveform from the figure given above.

The average value of V_s is $(1 - D)V_o$ where D is the duty cycle of the waveform driving the switch. From this expression, we get the ideal transfer function of the converter:

$$V_i = (1 - D)V_o$$

or

$$\frac{V_o}{V_i} = \frac{1}{1 - D}$$

We get the same result from a more detailed analysis as follows:

The output voltage can be calculated as follows, in the case of an ideal converter (i.e. using components with an ideal behaviour) operating in steady conditions:

During the on-state, the switch S is closed, which makes the input voltage (V_i) appear across the inductor, which causes a change in current (I_L) flowing through the inductor during a time period (t) by the formula:

$$\frac{\Delta I_L}{\Delta t} = \frac{V_i}{L}$$

Where: L is the inductor value.

At the end of the on-state, the increase of I_L is therefore:

$$\Delta I_{L_{on}} = \frac{1}{L}\int_0^{DT} V_i\, dt = \frac{V_i DT}{L} \qquad (Eq.1)$$

D is the duty cycle. It represents the fraction of the commutation period T during which the switch is on. Therefore, D ranges between 0 (S is never on) and 1 (S is always on).

During the off state, the switch S is open, so the inductor current flows through the load. If we consider zero voltage drop in the diode, and a capacitor large enough for its voltage to remain constant, the evolution of I_L is:

$$V_o - V_i = L\frac{dI_L}{dt}$$

Therefore, the variation of I_L during the off period is:

$$\Delta I_{L_{off}} = \int_{DT}^{T} \frac{(V_i - V_o)dt}{L} = \frac{(V_i - V_o)(1-D)T}{L} \qquad (Eq.2)$$

As we consider that the converter operates in steady-state conditions, the amount of energy stored in each of its components must be the same at the beginning and at the end of a commutation cycle. In particular, the energy stored in the inductor is given by:

$$E = \frac{1}{2}LI_L^2$$

So, the inductor current must be the same at the start and end of the commutation cycle. This means the overall change in the current (the sum of the changes) is zero:

$$\Delta I_{L_{on}} + \Delta I_{L_{off}} = 0$$

Substituting $\Delta I_{L_{on}}$ and $\Delta I_{L_{off}}$ by their expressions in Eqs. (1) and (2) yields:

$$\Delta I_{L_{on}} + \Delta I_{L_{off}} = \frac{V_i DT}{L} + \frac{(V_i - V_o)(1-D)T}{L} = 0$$

This can be written as the voltage gain of the converter:

$$\frac{V_o}{V_i} = \frac{1}{1-D}$$

The above equation shows that the output voltage is always higher than the input voltage (as the duty cycle goes from 0 to 1), and that it increases with D, theoretically to infinity as D approaches 1. This is why this converter is sometimes referred to as a step-up converter.

Rearranging the equation reveals the duty cycle to be:

$$D = 1 - \frac{V_i}{V_o}$$

ii. Discontinuous Conduction Mode (DCM)

The following figure shows the waveforms of inductor current and voltage in a Boost converter operating in discontinuous mode. If the ripple amplitude of the current is too high, the inductor may be completely discharged before the end of a whole commutation cycle.

This commonly occurs under light loads. In this case, the current through the inductor falls to zero during part of the period (see waveforms in the figure given below).

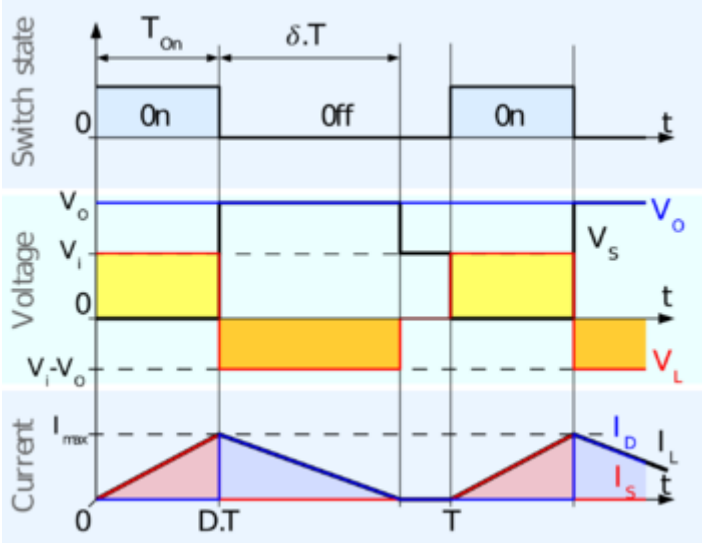

Although the mode of operation is slightly difference, it has a strong effect on the output voltage equation. The voltage gain can be calculated as follows:

As the inductor current at the beginning of the cycle is zero, its maximum value $I_{L(\max)}$ (at $t = DT$) is:

$$I_{L(\max)} = \frac{V_i DT}{L} \qquad (Eq.3)$$

During the off period, I_L falls to zero after δT:

$$I_{L(\max)} + \frac{(V_i - V_o)\delta T}{L} = 0 \qquad (Eq.4)$$

Using the two previous equations Eqs. (3) and (4), δ is:

$$\frac{V_i DT}{L} + \frac{(V_i - V_o)\delta T}{L} = 0$$

Rearranging the equation:

$$\delta = \frac{V_i D}{V_o - V_i} \qquad (Eq.5)$$

The load current I_o is equal to the average diode current (I_D). As can be seen on figure given above, the diode current is equal to the inductor current during the off state.

The average value of I_o can be sorted out geometrically from figure given above. Therefore, the output current can be written as:

$$I_o = \bar{I}_D = \left(\frac{I_{L(\max)}}{2}\right)\delta \qquad (Eq.6)$$

Replacing $I_{L(\max)}$ and δ by their respective expressions in Eqs. (3) and (5) yields:

$$I_o = \frac{V_i DT}{2L}.\frac{V_i D}{V_o - V_i} = \frac{V_i^2 D^2 T}{2L(V_o - V_i)}$$

Therefore, the voltage gain of the converter can be written as follows:

$$\frac{V_o}{V_i} = 1 + \frac{V_i D^2 T}{2LI_o} \qquad (Eq.7)$$

Compared to the expression of the output voltage gain for continuous mode, this expression is much more complicated.

Furthermore, in discontinuous operation, the output voltage gain not only depends on the duty cycle (D), but also on the inductor value (L), the input voltage (V_i), the commutation period (T) and the output current (I_o).

Substituting $I_o = V_o/R$ into the equation Eq.7 (R is the load), the voltage gain of the converter can be rewritten as:

$$\frac{V_o}{V_i} = 1 + \frac{V_i D^2 T}{2L\left(\frac{V_o}{R}\right)}$$

Rearranging and solving the equation, the voltage gain of the converter is:

$$\frac{V_o}{V_i} = \frac{1 + \sqrt{1 + \frac{4D^2}{K}}}{2}$$

Where:

$$K = \frac{2L}{RT}$$

10. Given an inverting (Buck-Boost) converter circuit as shown in the figure given below, its operation is like a combination of a Buck converter with a Buck converter.

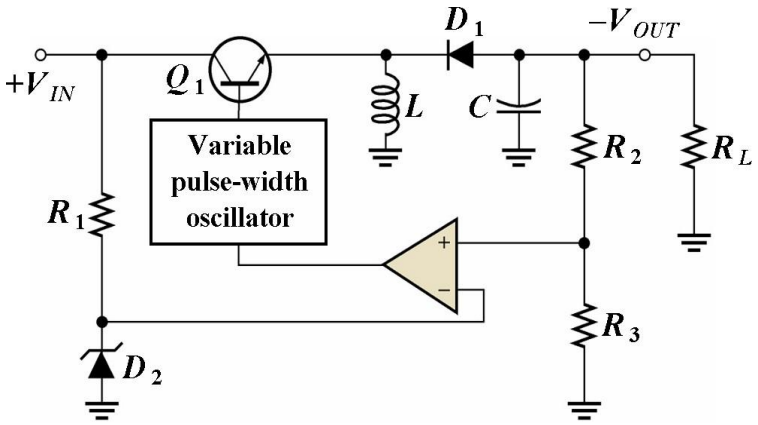

a. Given the input is 24 V DC, determine the values of resistors R_2 and R_3 for the output voltage of 15 V DC. [20 marks]]

b. If you wish a discontinuous operation of the given converter what are the values of resistors R_2 and R_3. [30 marks]

c. Describe three differences of inverting (Buck-Boost) converter vs. Buck or Boost converter. [6 marks]

Solution

a. For a given inverting (Buck-Boost) converter circuit given in the figure below:

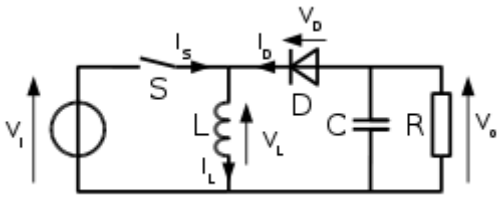

If the current through the inductor L never falls to zero during a commutation cycle, the converter is said to operate in continuous mode.

The current and voltage waveforms in an ideal converter can be seen in the following figure.

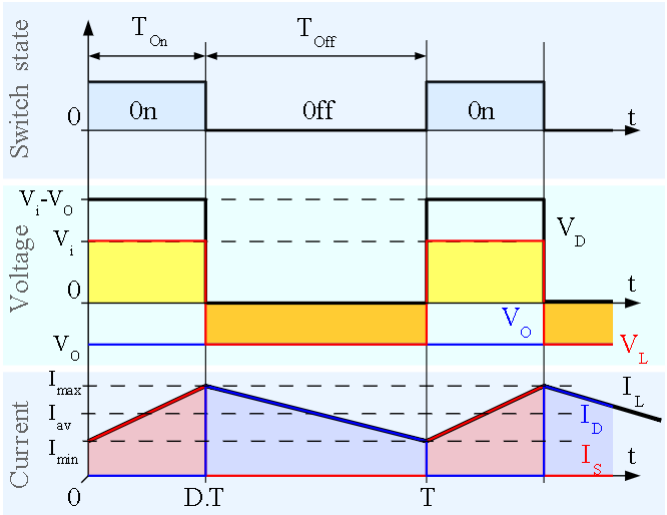

From $t = 0$ to $t = DT$, the converter is in on-state, so the switch S is closed.

The rate of change in the inductor current (I_L) is therefore given by:

$$\frac{dI_L}{dt} = \frac{V_i}{L}$$

At the end of the on-state, the increase of I_L is therefore:

$$\Delta I_{L_{On}} = \int_0^{DT} dI_L = \int_0^{DT} \frac{V_i}{L} dt = \frac{V_i DT}{L} \qquad (Eq.1)$$

D is the duty cycle. It represents the fraction of the commutation period T during which the switch is on. Therefore D ranges between 0 (S is never on) and 1 (S is always on).

During the off state, the switch S is open, so the inductor current flows through the load. If we assume zero voltage drop in the diode, and a capacitor large enough for its voltage to remain constant, the evolution of I_L is:

$$\frac{dI_L}{dt} = \frac{V_o}{L}$$

Therefore, the variation of I_L during the off period is:

$$\Delta I_{L_{Off}} = \int_0^{(1-D)T} dI_L = \int_0^{(1-D)T} \frac{V_o dt}{L} = \frac{V_o(1-D)T}{L} \qquad (Eq.2)$$

As we consider that the converter operates in steady-state conditions, the amount of energy stored in each of its components must be the same at the beginning and at the end of a commutation cycle. As the energy in an inductor (W_L) is given by:

$$W_L = \frac{1}{2} L I_L^2$$

It is obvious that the value of I_L at the end of the off state must be the same with the value of I_L at the beginning of the on-state, i.e. the sum of the variations of I_L during the on and the off states must be zero:

$$\Delta I_{L_{On}} + \Delta I_{L_{Off}} = 0$$

Substituting $\Delta I_{L_{on}}$ and $\Delta I_{L_{off}}$ by their expressions in Eqs. (1) and (2) yields:

$$\Delta I_{L_{On}} + \Delta I_{L_{Off}} = \frac{V_i DT}{L} + \frac{V_o(1-D)T}{L} = 0$$

Thus, the voltage gain of the converter can be written as:

$$\frac{V_o}{V_i} = \frac{-D}{1-D}$$

This in return yields that:

$$D = \frac{V_o}{V_o - V_i}$$

From the above expression, the polarity of the output voltage is always negative (because the duty cycle goes from 0 to 1), and that its absolute value increases with D, theoretically up to minus infinity when D approaches 1.

Apart from the polarity, this converter is either step-up (a Boost converter) or step-down (a Buck converter). Thus, it is named a Buck–Boost converter.

Assuming a maximum duty cycle of $D = 0.5$, then $V_o = -V_{in}$. As a result, the values of resistors R_2 and R_3 are found from the ratio of the potential divider sensing resistors of the inverting converter:

$$\frac{V_o}{V_i} = \frac{R_3}{(R_2 + R_3)} = \frac{15\ \text{k}\Omega}{15\ \text{k}\Omega + 9\ \text{k}\Omega}$$

Choose arbitrarily the values of the resistors as R_3 = 15 kΩ and R_2 = 9 kΩ.

b. Values of R_2 and R_3 for DCM operation of the inverting (Buck-Boost) converter.

In discontinuous conduction mode (DCM) of the inverting converter, the amount of energy required by the load is small enough to be transferred in a time smaller than the whole commutation period.

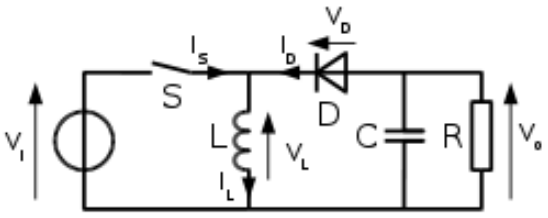

In this case, the current through the inductor falls to zero during part of the period. The only difference in the principle described above is that the inductor is completely discharged at the end of the commutation cycle (see waveforms in the figure given below).

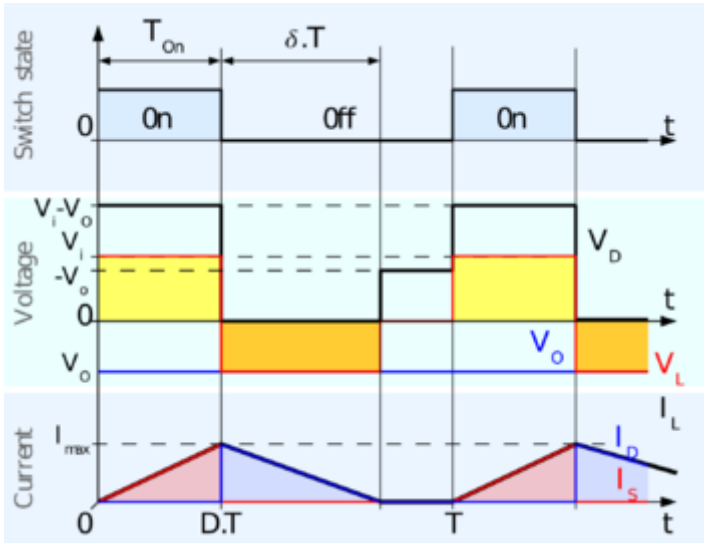

Although similar, the difference has a strong effect on the output voltage equation. It can be calculated as follows.

Because the inductor current at the beginning of the cycle is zero, its maximum value $I_{L(\max)}$ (at $t = DT$) is:

$$I_{L(\max)} = \frac{V_i DT}{L} \qquad (Eq.3)$$

During the off period, I_L falls to zero after δT:

$$I_{L(\max)} + \frac{V_o \delta T}{L} = 0 \qquad (Eq.4)$$

Using the two previous equations of Eqs. (3) and (5), δ is:

$$\delta = -\frac{V_i D}{V_o} \qquad (Eq.5)$$

The load current I_L is equal to the average diode current (I_D). As can be seen in the figure given above, the diode current is equal to the inductor current during the off state. Therefore, the output current can be written as:

$$I_o = I_D = \left(\frac{I_{L(\max)}}{2}\right)\delta \qquad (Eq.6)$$

Replacing $I_{L(\max)}$ and δ by their respective expressions in Eqs (3) and (5) yields:

$$I_o = -\left(\frac{V_i DT}{2L}\right)\left(\frac{V_i D}{V_o}\right) = -\left(\frac{V_i^2 D^2 T}{2LV_o}\right)$$

Therefore, the voltage gain of the converter can be written as:

$$\frac{V_o}{V_i} = -\left(\frac{V_i D^2 T}{2LI_o}\right)$$

Compared to the expression of the output voltage gain for the continuous mode, this expression is much more complicated.

Furthermore, in discontinuous operation, the output voltage not only depends on the duty cycle, but also on the inductor value, the input voltage and the output current.

For calculating the values of the sensing resistors:

$$I_{L_{max}} = \frac{V_i DT}{L}$$

Rearranging the equation given above, the inductance of the inductor is:

$$L = \frac{V_i DT}{I_{L_{max}}}$$

Assuming values of the maximum duty cycle of $D = 0.5$, switching frequency of 20 kHz is a result the switching period of the converter $T = 0.05$ ms.

For the assumed maximum allowable inductor current, $I_{L_{max}} = 2$ A, then the value of inductor of the converter is:

$$L = \frac{V_i DT}{I_{L_{max}}} = \frac{(24\text{ V})(0.5)(0.05 \times 10^{-3})}{(2\text{ A})} = 300\text{ nH}$$

Assuming the output current of the converter, the value of the δ is found from:

$$\delta = \frac{I_{L_{max}}}{2I_o} = \frac{(2\text{ A})}{2(2\text{ A})} = 0.5$$

This value of δ is bigger than equal to 0.5 for ensuring discontinuous conduction mode (DCM) operation of the inverting converter.

Acknowledging that $V_i = 24$ V, as a result the ratio of output voltage over the input voltage is found from:

$$\frac{V_o}{V_i} = \frac{V_i D^2 T}{2LI_o} = \frac{(24)(0.5)^2(0.05 \times 10^{-3})}{2(300 \times 10^{-6})(2\text{ A})} = \frac{0.3}{1.2} = 0.25$$

Then, the values of the sensing resistors (R_2 and R_3) are the ratio of the potential divider sensing resistors of the converter:

$$\frac{V_o}{V_i} = \frac{R_3}{(R_2 + R_3)} = 0.25$$

Choose arbitrarily the values of the resistors as R_3 = 1 kΩ and R_2 = 3 kΩ.

c. Three differences of inverting (Buck-Boost) converter vs. Buck or Boost converter:

Compared to the Buck and Boost converters, the characteristics of the inverting (Buck–Boost) converter are mainly:

- The polarity of the output voltage is opposite to that of the input, as for the other converters they are the same ones.
- The output voltage can vary continuously from 0 to $-\infty$ (for an ideal converter). The output voltage ranges for a Buck and a Boost converter are respectively V_i to 0 and V_i to ∞.
- When designing an inverting converter, we need to consider the maximum reverse bias of the relevant components i.e. transistors and diodes used in the circuit during conduction, which is not the case for the other types of converters.