XMUT303 Analogue Electronics

Tutorial 6: Power Supplies

A. Linear Voltage Regulators

1. For a linear power supply in the circuit of the figure given below, it takes its input from an AC supply. The power supply consists of a full-wave rectifier and a low-pass filter circuits and is connected to a 5 kΩ load resistor.

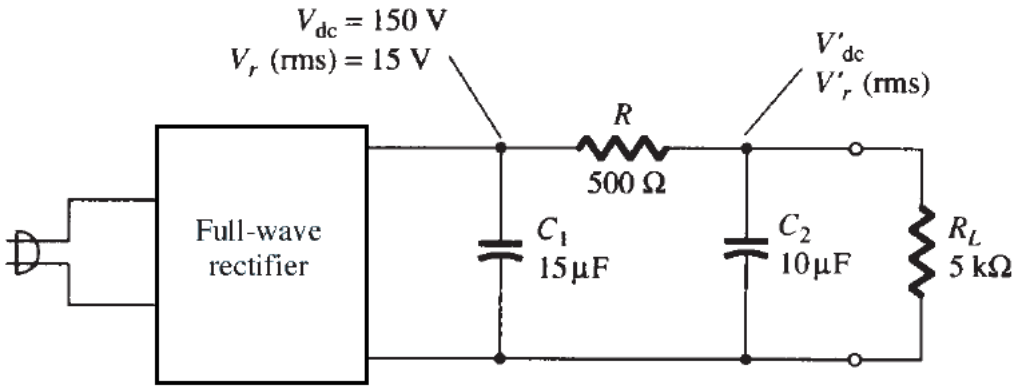

a. Calculate the DC and AC components of the output signal across load R_L. [6 marks]

b. Calculate the percentage of the ripple of the output waveform. [4 marks]

2. For a given series voltage regulator circuit given in the figure below, its reference voltage is based on a 12 V Zener diode.

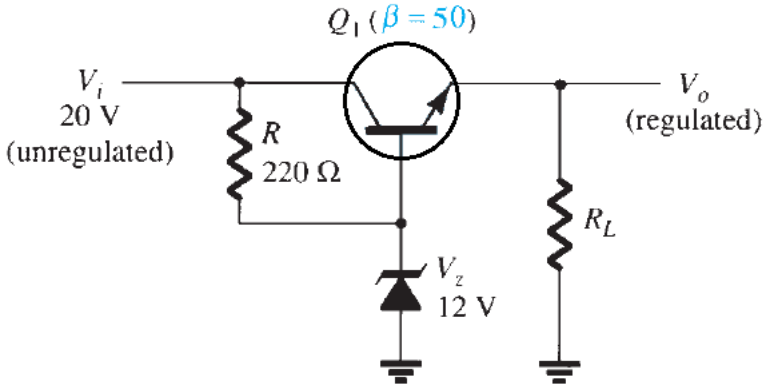

a. Calculate the output voltage and voltage across collector-emitter of the transistor. [4 marks]

b. Calculate the Zener current in the regulator circuit for R_L = 1 kΩ. [8 marks]

3. For a shunt voltage regulator circuit given below, its reference voltage is derived from a 120 Ω sensing resistor and 8.2 V Zener diode.

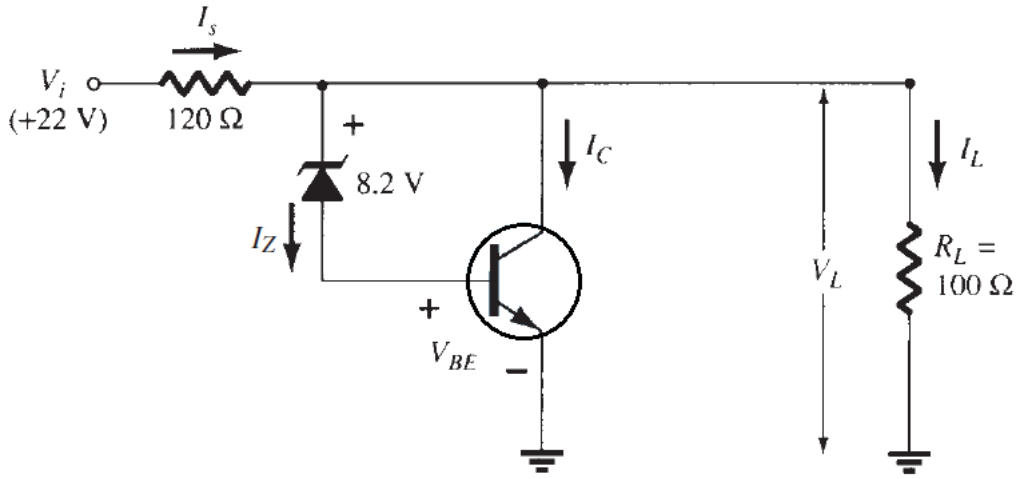

a. Determine the regulated voltage across the load resistor. [4 marks]

b. Determine the currents in the circuit. [6 marks]

4. For a fixed-voltage regulator-based power supply circuit given below, it is based on 7805 integrated circuit.

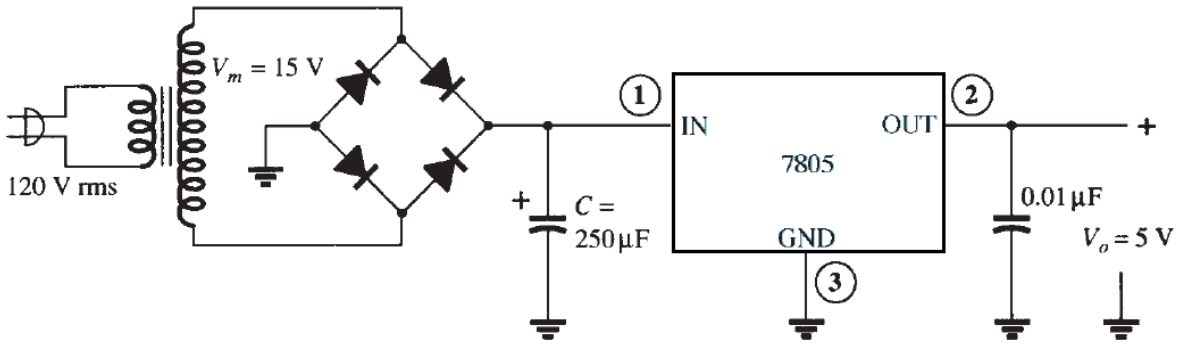

a. Determine the maximum value of load current at which regulation is maintained. [4 marks]

b. Sketch the approximate triangular ripple input voltage of the filter capacitor. [5 marks]

c. Calculate the root mean square value of the ripple input voltage of the regulator. [4 marks]

d. Calculate the value of DC current in the input. [2 marks]

5. For a variable voltage regulator circuit as in the figure given below, it is based on LM317 integrated circuit.

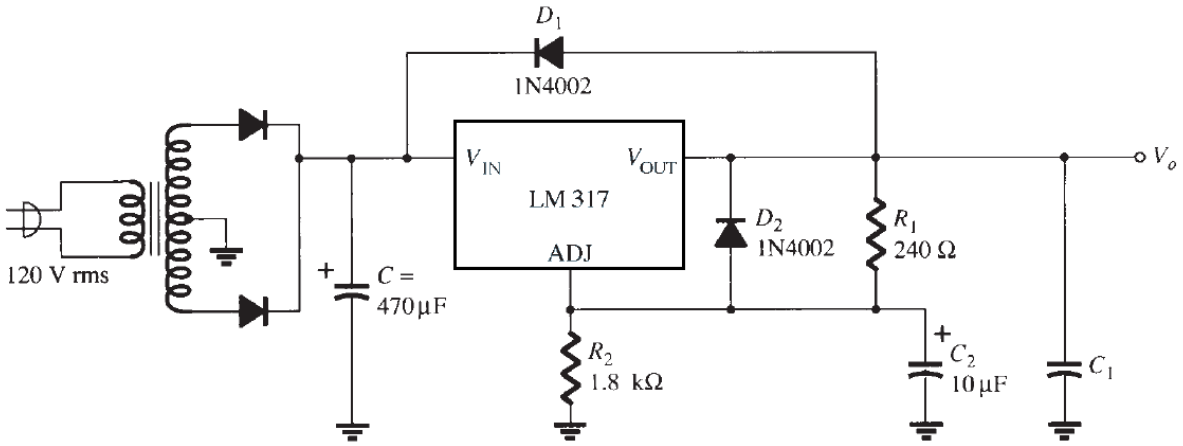

a. Derive the equation for determining the regulated output voltage (V_o). [4 marks]

b. Determine the regulated output voltage of the circuit. [4 marks]

B. Transformer and Inductor

6. Design a line transformer for a low power application operating at a primary voltage of 230 V AC (rms) at a frequency of 50 Hz and output voltage of 18 V. The magnetic core for our example has a cross-sectional area of 8 mm x 8 mm, and a maximum flux density of 1.3 T.



a. Determine the maximum flux of the transformer. [6 marks]

b. Derive the equation for determining the average output voltage and calculate its value. [10 marks]

c. Determine the required number of turns of the secondary winding. [8 marks]

d. State two assumptions related to power transfer determination of small transformer. [4 marks]

e. Determine the winding window area and copper area of the transformer. [8 marks]

f. Calculate the resistance of the windings of the transformer. [10 marks]

g. Determine the power loss and rated power of the transformer. [4 marks]

7. You are given a task to design an inductor for a switching converter operating at 20 kHz, with a 42% duty cycle and input voltage of 230 V AC (rms). The magnetic material core is a toroid inductor that has a cross-sectional area of 2 cm^2. From the manufacturer datasheet of the magnetic core, it is suggested a maximum flux density of 0.055 Tesla at the frequency of operation.

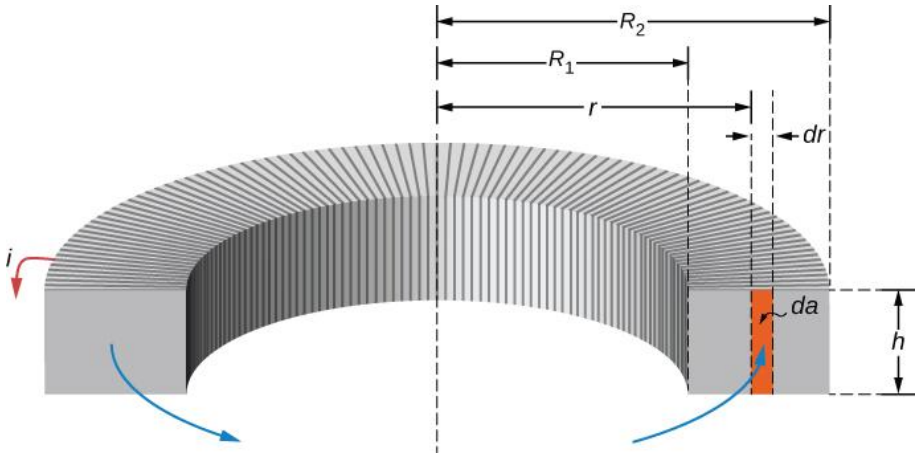

Where: inner radius R_1, outer radius R_2, average radius, r, and height, h, determine:

a. The inductance of inductor. [8 marks]

b. The transfer power of inductor. [6 marks]

c. The quality factor of the inductor. [4 marks]

C. Switching Voltage Regulators

8. Design a step down (Buck) converter circuit as illustrated in the figure below with the following design specification: 24 V input source and a load of 12 V and 2 A. The switching frequency is at 100 kHz. The current ripple will be limited to 10% of maximum load.

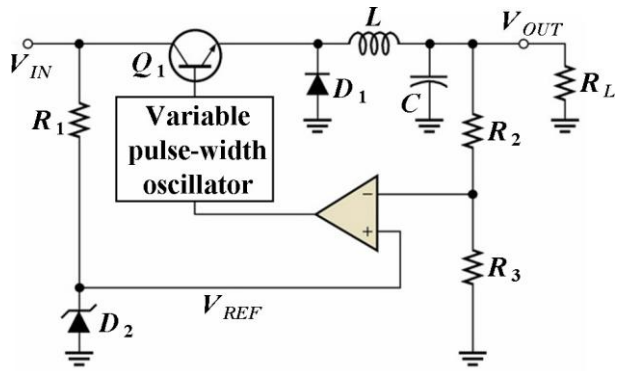

a. Determine the converter basic parameters (e.g. duty cycle and max. ripple voltage). [6 marks]

b. Calculate the required inductance of the inductor. [8 marks]

c. Calculate the output capacitor requirements. [14 marks]

d. Calculate the input capacitor requirements. [6 marks]

e. Determine and select the power diode. [4 marks]

f. Determine and choose the power transistor. [8 marks]

g. Calculate the converter overall efficiency. [6 marks]

9. By referring to a step up (Boost) converter circuit given in the figure below, its operation is based on a variable pulse-width oscillator circuit.

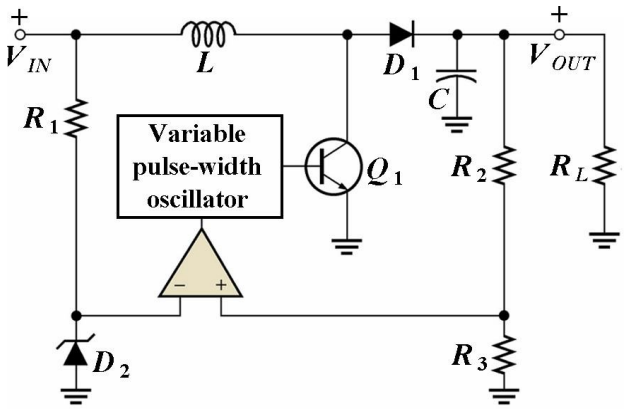

a. Describe the operation of the Boost converter. [10 marks]

b. Providing values of resistors are R_2 = 5 kΩ and R_3 = 10 kΩ, V_z = 5 V, and converter duty cycle is 0.24, calculate the voltage observed in the output (V_{out}) if input voltage is 48 V DC. [4 marks]

c. What is a continuous conduction mode and how is it different from the discontinuous conduction mode? [40 marks]

10. Given an inverting (Buck-Boost) converter circuit shown in the figure given below, its operation is like a combination of a Buck converter with a Buck converter.

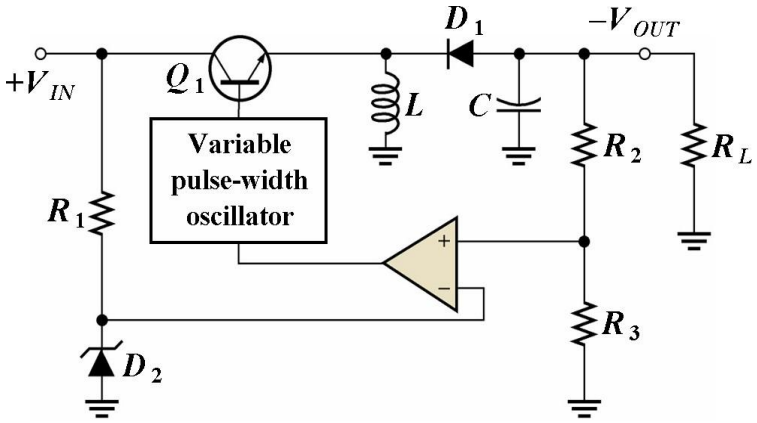

a. Given the input is 24 V DC, determine the values of resistors R_2 and R_3 for the output voltage of 15 V DC. [20 marks]

b. If you wish a discontinuous operation of the given converter what are the values of resistors R_2 and R_3. [30 marks]

c. Describe three differences of inverting (Buck-Boost) converter vs. Buck or Boost converter. [6 marks]

Appendices

Appendix 1 - Capacitor Datasheet (Electrolyte Capacitor: C = 27 μF, V = 25 V, ESR = 0.03 Ω)

ELECTRICAL DATA AND ORDERING INFORMATION

U_R (V)	C_R 100 Hz (μF)	NOMINAL CASE SIZE Ø D x L (mm)	I_R 100 Hz 105 °C (mA)	I_{L5} 5 min (μA)	tan δ 100 Hz	ESR 100 Hz (Ω)	Z 10 kHz (Ω)	Z 100 kHz (Ω)	ORDERING CODE MAL2138..... IN BOX FORM AA	TAPED ON REEL FORM BR	TAPED IN BOX FORM BA	MOUNTING RING FORM MR
25	10	6.3 x 12.7	46	4.5	0.09	14.000	12.000	2.800	-	26109E3	36109E3	-
	22	6.3 x 12.7	61	5.1	0.14	10.000	5.500	2.500	-	26229E3	36229E3	-
	47	7.7 x 12.7	96	6.4	0.14	4.700	2.600	1.000	-	26479E3	36479E3	-

ADDITIONAL ELECTRICAL DATA

PARAMETER	CONDITIONS	VALUE
Voltage		
Surge voltage		$U_s \leq 1.15 \times U_R$
Reverse voltage		$U_{rev} \leq 1$ V
Current		
Leakage current	After 2 min at U_R	$I_{L2} \leq 0.01\ C_R \times U_R$
Inductance		
Equivalent series inductance (ESL)	Case Ø D = 10 mm	Typ. 16 nH
	Case Ø D ≥ 12.5 mm	Typ. 18 nH
Resistance		
Equivalent series resistance (ESR)	Calculated from tan $\delta_{max.}$ and C_R (see Table 2)	ESR = tan δ/2 π f C_R

Appendix 2 - Capacitor Datasheet (Electrolyte Capacitor: C = 63 μF, V = 50 V, ESR = 0.12 Ω)

ELECTRICAL DATA AND ORDERING INFORMATION

U_R (V)	C_R 100 Hz (μF)	NOMINAL CASE SIZE Ø D x L (mm)	I_R 100 Hz 105 °C (mA)	I_{L5} 5 min (μA)	tan δ 100 Hz	ESR 100 Hz (Ω)	Z 10 kHz (Ω)	Z 100 kHz (Ω)	ORDERING CODE MAL2138..... IN BOX FORM AA	TAPED ON REEL FORM BR	TAPED IN BOX FORM BA	MOUNTING RING FORM MR
50	10	6.3 x 12.7	51	5.0	0.09	14.00	7.000	2.700	-	21109E3	31109E3	-
	22	7.7 x 12.7	82	6.2	0.09	6.500	3.200	1.100	-	21229E3	31229E3	-
	100	10 x 18	230	14	0.08	1.300	0.700	0.300	-	21101E3	31101E3	-
63	4.7	6.3 x 12.7	35	4.6	0.09	30.00	17.000	5.000	-	28478E3	38478E3	-
	10	7.7 x 12.7	59	5.3	0.08	13.00	8.000	1.800	-	28109E3	38109E3	-
	22	6.5 x 18	100	6.8	0.07	5.100	3.600	0.850	-	28229E3	38229E3	-
	47	8 x 18	150	9.9	0.07	2.400	1.700	0.500	-	28479E3	38479E3	-
	100	10 x 25	280	17	0.07	1.100	0.800	0.270	-	28101E3	38101E3	-
	150	10 x 30	410	23	0.11	0.730	0.440	0.400	18151E3	28151E3	-	-
	220	12.5 x 30	560	32	0.11	0.500	0.310	0.290	18221E3	28221E3	-	-

ADDITIONAL ELECTRICAL DATA		
PARAMETER	**CONDITIONS**	**VALUE**
Voltage		
Surge voltage		$U_s \leq 1.15 \times U_R$
Reverse voltage		$U_{rev} \leq 1$ V
Current		
Leakage current	After 2 min at U_R	$I_{L2} \leq 0.01\ C_R \times U_R$
Inductance		
Equivalent series inductance (ESL)	Case Ø D = 10 mm	Typ. 16 nH
	Case Ø D ≥ 12.5 mm	Typ. 18 nH
Resistance		
Equivalent series resistance (ESR)	Calculated from tan $\delta_{max.}$ and C_R (see Table 2)	ESR = tan $\delta/2\ \pi\ f\ C_R$

Appendix 3 - Diode Datasheet (1N5820 Schottky diode with forward drops: V_f = 20 V, I_f = 3 A)

PRIMARY CHARACTERISTICS	
$I_{F(AV)}$	3.0 A
V_{RRM}	20 V, 30 V, 40 V
I_{FSM}	80 A
V_F	0.475 V, 0.500 V, 0.525 V
T_J max.	125 °C
Package	DO-201AD
Diode variations	Single

MAXIMUM RATINGS (T_A = 25 °C unless otherwise noted)					
PARAMETER	**SYMBOL**	**1N5820**	**1N5821**	**1N5822**	**UNIT**
Maximum repetitive peak reverse voltage	V_{RRM}	20	30	40	V
Maximum RMS voltage	V_{RMS}	14	21	28	V
Maximum DC blocking voltage	V_{DC}	20	30	40	V
Non-repetitive peak reverse voltage	V_{RSM}	24	36	48	V
Maximum average forward rectified current at 0.375" (9.5 mm) lead length at T_L = 95 °C	$I_{F(AV)}$	3.0			A
Peak forward surge current, 8.3 ms single half sine-wave superimposed on rated load	I_{FSM}	80			A
Operating junction and storage temperature range	T_J, T_{STG}	- 65 to + 125			°C

ELECTRICAL CHARACTERISTICS (T_A = 25 °C unless otherwise noted)						
PARAMETER	**TEST CONDITIONS**	**SYMBOL**	**1N5820**	**1N5821**	**1N5822**	**UNIT**
Maximum instantaneous forward voltage	3.0	V_F (1)	0.475	0.500	0.525	V
Maximum instantaneous forward voltage	9.4	V_F (1)	0.850	0.900	0.950	V
Maximum average reverse current at rated DC blocking voltage	T_A = 25 °C	I_R (1)	2.0			mA
	T_A = 100 °C		20			

Note

(1) Pulse test: 300 µs pulse width, 1 % duty cycle

THERMAL CHARACTERISTICS (T_A = 25 °C unless otherwise noted)					
PARAMETER	**SYMBOL**	**1N5820**	**1N5821**	**1N5822**	**UNIT**
Typical thermal resistance	$R_{\theta JA}$ (1)	40			°C/W
	$R_{\theta JL}$ (1)	10			

Note

(1) Thermal resistance from junction to lead vertical PCB mounted, 0.500" (12.7 mm) lead length with 2.5" x 2.5" (63.5 mm x 63.5 mm) copper pad

Appendix 4 - Transistor Datasheet (IRF7416PbF PNP MOSFET, V_{DSS} = -30 V, I_D = -10 A, and R_{ds} = 0.02 Ω)

Absolute Maximum Ratings

	Parameter	Max.	Units
I_D @ T_A = 25°C	Continuous Drain Current, V_{GS} @ -10V	-10	A
I_D @ T_A = 70°C	Continuous Drain Current, V_{GS} @ -10V	-7.1	
I_{DM}	Pulsed Drain Current ①	-45	
P_D @T_A = 25°C	Power Dissipation	2.5	W
	Linear Derating Factor	0.02	W/°C
V_{GS}	Gate-to-Source Voltage	± 20	V
E_{AS}	Single Pulse Avalanche Energy②	370	mJ
dv/dt	Peak Diode Recovery dv/dt ③	-5.0	V/ns
T_J T_{STG}	Operating Junction and Storage Temperature Range	-55 to + 150	°C

Thermal Resistance

	Parameter	Max.	Units
$R_{\theta JA}$	Junction-to-Ambient ⑤	50	°C/W

Static Electrical Characteristics @ T_J = 25°C (unless otherwise specified)

	Parameter	Min.	Typ.	Max.	Units	Conditions
$V_{(BR)DSS}$	Drain-to-Source Breakdown Voltage	-30	—	—	V	V_{GS} = 0V, I_D = -250µA
$\Delta V_{(BR)DSS}/\Delta T_J$	Breakdown Voltage Temp. Coefficient	—	-0.024	—	V/°C	Reference to 25°C, I_D = -1mA
$R_{DS(on)}$	Static Drain-to-Source On-Resistance	—	—	0.020	Ω	V_{GS} = -10V, I_D = -5.6A ④
		—	—	0.035		V_{GS} = -4.5V, I_D = -2.8A ④
$V_{GS(th)}$	Gate Threshold Voltage	-1.0	—	-2.04	V	V_{DS} = V_{GS}, I_D = -250µA
gfs	Forward Transconductance	5.6	—	—	S	V_{DS} = -10V, I_D = -2.8A
I_{DSS}	Drain-to-Source Leakage Current	—	—	-1.0	µA	V_{DS} = -24V, V_{GS} = 0V
		—	—	-25		V_{DS} = -24V, V_{GS} = 0V, T_J = 125°C
I_{GSS}	Gate-to-Source Forward Leakage	—	—	-100	nA	V_{GS} = -20V
	Gate-to-Source Reverse Leakage	—	—	100		V_{GS} = 20V

Dynamic Electrical Characteristics @ T_J = 25°C (unless otherwise specified)

	Parameter	Min.	Typ.	Max.	Units	Conditions
Q_g	Total Gate Charge	—	61	92	nC	I_D = -5.6A
Q_{gs}	Gate-to-Source Charge	—	8.0	12		V_{DS} = -24V
Q_{gd}	Gate-to-Drain ("Miller") Charge	—	22	32		V_{GS} = -10V, See Fig. 6 & 9 ④
$t_{d(on)}$	Turn-On Delay Time	—	18	—	ns	V_{DD} = -15V
t_r	Rise Time	—	49	—		I_D = -5.6A
$t_{d(off)}$	Turn-Off Delay Time	—	59	—		R_G = 6.2Ω
t_f	Fall Time	—	60	—		R_D = 2.7Ω, See Fig. 10 ④
C_{iss}	Input Capacitance	—	1700	—	pF	V_{GS} = 0V
C_{oss}	Output Capacitance	—	890	—		V_{DS} = -25V
C_{rss}	Reverse Transfer Capacitance	—	410	—		f = 1.0MHz, See Fig. 5

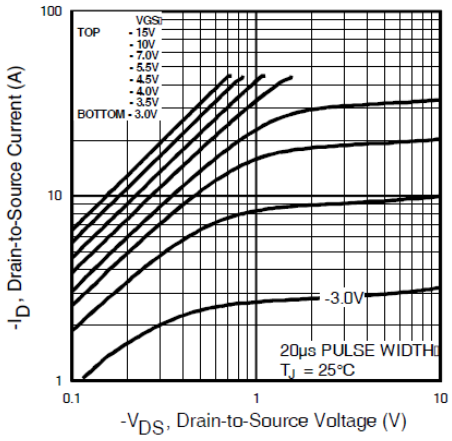
VGS
TOP - 15V
- 10V
- 7.0V
- 5.5V
- 4.5V
- 4.0V
- 3.5V
BOTTOM - 3.0V
-3.0V
20µs PULSE WIDTH
TJ = 25°C
100
10
1
0.1
1
10
-ID, Drain-to-Source Current (A)
-VDS, Drain-to-Source Voltage (V)

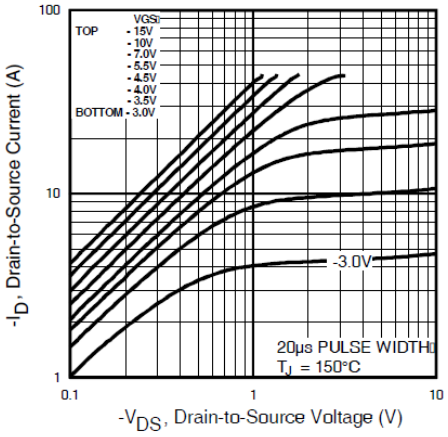
VGS
TOP - 15V
- 10V
- 7.0V
- 5.5V
- 4.5V
- 4.0V
- 3.5V
BOTTOM - 3.0V
-3.0V
20µs PULSE WIDTH
TJ = 150°C
100
10
1
0.1
1
10
-ID, Drain-to-Source Current (A)
-VDS, Drain-to-Source Voltage (V)

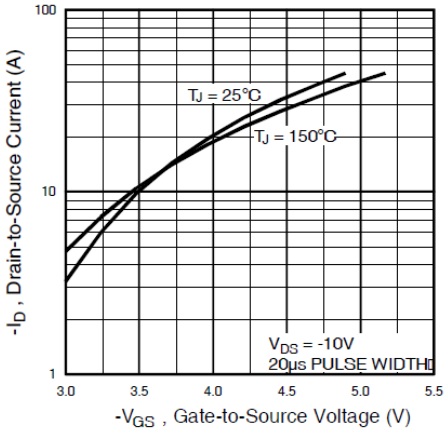
TJ = 25°C
TJ = 150°C
VDS = -10V
20µs PULSE WIDTH
100
10
1
3.0
3.5
4.0
4.5
5.0
5.5
-ID, Drain-to-Source Current (A)
-VGS , Gate-to-Source Voltage (V)

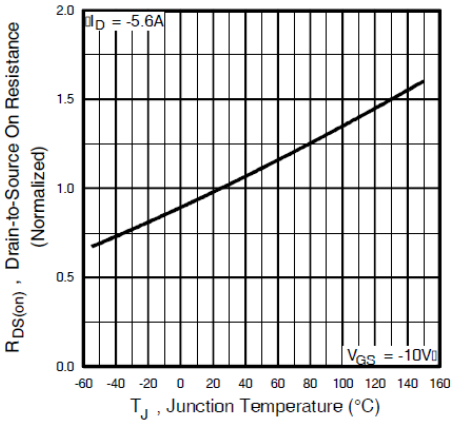
ID = -5.6A
VGS = -10V
2.0
1.5
1.0
0.5
0.0
-60
-40
-20
0
20
40
60
80
100
120
140
160
RDS(on) , Drain-to-Source On Resistance
(Normalized)
TJ , Junction Temperature (°C)