XMUT303 Analogue Electronics

Tutorial 7: Thermal and Noise Analysis

Section A. Thermal Analysis

1. When power loss occurs in electronics, it is turned into heat and the temperature of the device or component increases.

   a. Describe how the increase in device's temperature could affect the performance and characteristics of the device. [4 marks]

   b. With a help of a diagram, illustrate how heat produced at the die junction of a transistor is dissipated in the device. [4 marks]

   c. Referring to the equivalent thermal model of an electronic device given below, derive the relevant thermal equations and describe their uses. [12 marks]

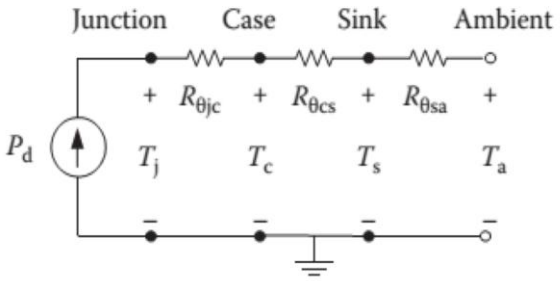

2. This experiment is conducted to measure the junction-to-case thermal resistance of an electronic component as shown in the figure below.

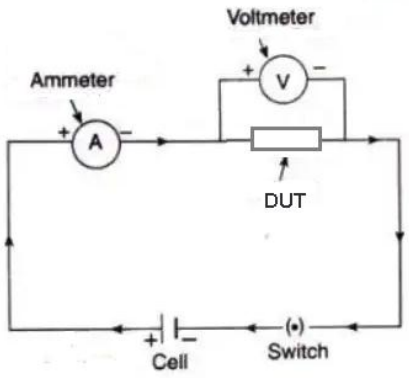

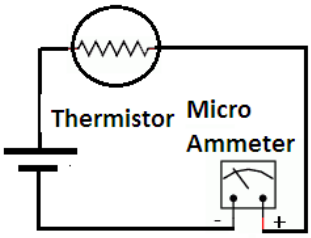

Power is supplied to the component from a 15-V source, and the variations in the electric current and in the junction and the case temperatures with time are observed. When things are stabilized, the current is observed to be 0.1 A and the temperatures to be 80°C and 55°C at the junction and the case respectively.

Calculate the junction-to-case resistance of this component. [8 marks]

3. For the following thermal analysis of an electronic device such as a transistor TIP31 as given below, it has a quoted maximum power output P_{TOT} of 40 W. It has a TO 220 packaging and can only handle 40 W of power if the case temperature (slightly less than the junction temperature) is kept below 25°C. The performance of the transistor is closely dependant on its ability to dissipate the heat generated at the collector base junction.

   The following figures show TO-220 packaging (left) and graph of power dissipation vs. case temperature of TIP31 (right).

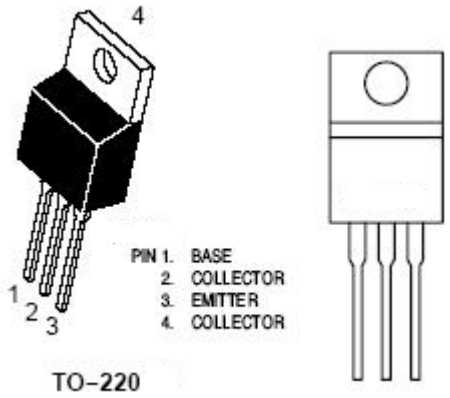

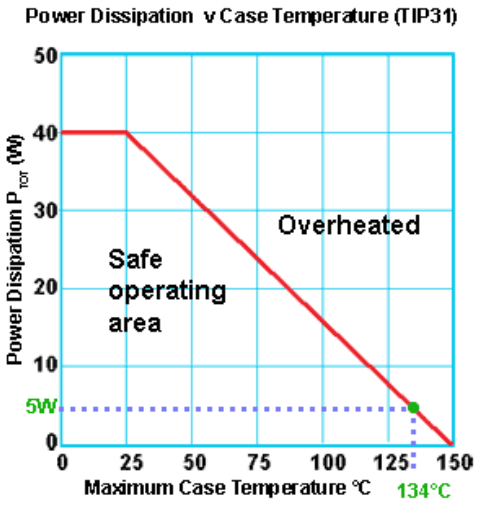

   For the thermal analysis of the given transistor, calculate as follows:

   a. Thermal resistance between junction and case. [10 marks]

   b. Maximum case temperature when dissipating 5 Watts. [4 marks]

   c. Maximum heatsink temperature. [4 marks]

   d. Thermal resistance of heatsink required. [6 marks]

4. A power MOSFET as shown in the figure below with its cooling arrangement has a total computed power dissipation of 10 Watts. The device's maximum junction temperature is 150°C. The actual case temperature of the MOSFET must be maintained equal to or below 100°C for a reliable operation. The MOSFET thermal resistance from junction to case is 3 K/W.

   a. Sketch the thermal analysis model of the transistor. [10 marks]

   b. Derive equation for relating temperatures and thermal resistances. [6 marks]

c. Describe the thermal resistance between the MOSFET case and the heat sink (θ_{cs}). [4 marks]

d. Derive equation for calculating the minimum heat sink size needed. [2 marks]

e. Calculate the minimum heatsink size needed if we neglect the thermal resistance from case to heat sink. [2 marks]

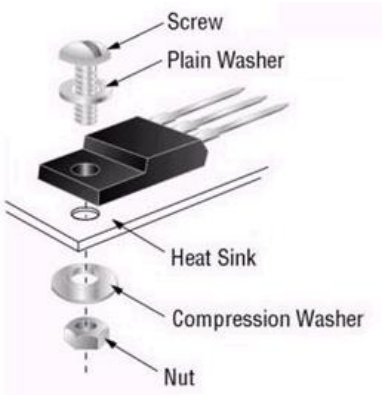

5. The figure below shows the thermal arrangement of a power diode. For the purpose of the thermal analysis, we will suppose that the application in question has a transistor housed in a TO-220 package, where conduction and switching losses equal a power dissipation of 2.78 W.

   From the transistor datasheet, the thermal impedance from junction-to-ambient is 62°C/W and maximum operating temperature of the silicon junction is 125°C.

   In addition, the ambient operating temperature will not go above 50°C. The figure below shows front and side view of a typical TO-220 package of the power diode with a heat.

   a. Is a heat sink necessary for this device? [6 marks]

   b. Describe how you establish thermal impedance paths. [4 marks]

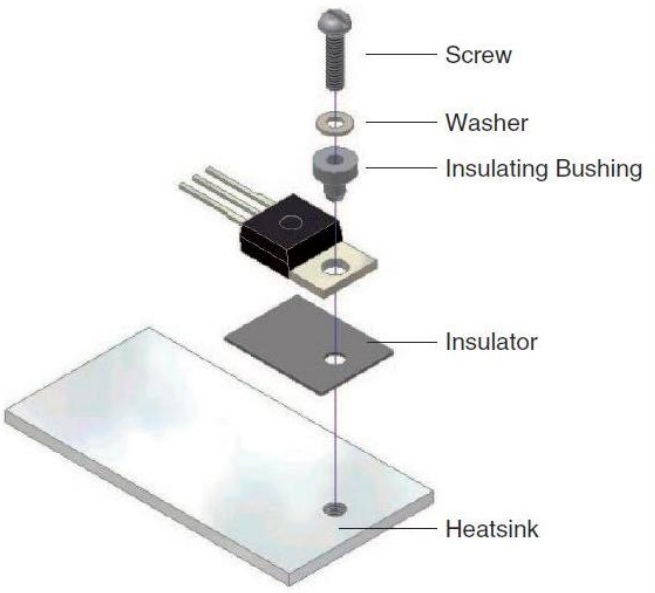

   c. Sketch and describe the thermal analysis model of the given power diode. [4 marks]

d. If there are sometimes irregularities in the two surfaces in thermal analysis, describe the significant of thermal insulation material. [4 marks]

e. Calculate the thermal resistance of the thermal interface materials required. [10 marks]

f. Describe how the use of the graph from the datasheet for thermal analysis given below will help you to determine the heatsink required. Furthermore, calculate the sink-to-ambient thermal impedance based on the indicated operating point as shown in the graph. [6 marks]

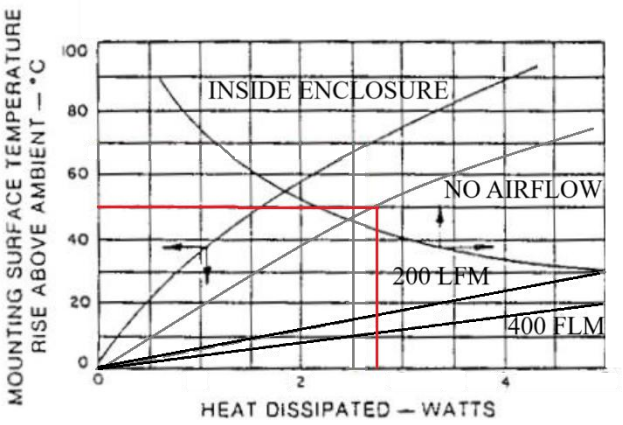

g. Describe any difference observed between the required thermal resistance of the heatsink from calculation as in part (e) with the graph as in part (f). [4 marks]

h. Calculate the maximum junction temperature of the power diode. [4 marks]

i. Describe the significant of having heatsink in the thermal arrangement of the power diode. [2 marks]

6. A semiconductor integrated circuit chip as illustrated in the figure below is dissipating 0.6 W of power in a dual in-line package (DIP) packaging with 12 pin leads.

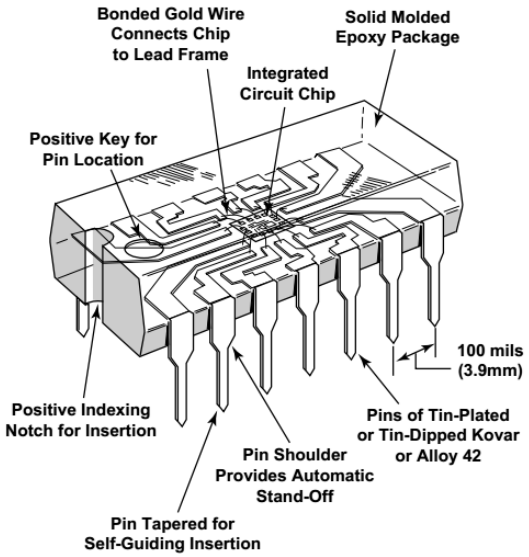

Parts and materials of the integrated circuit device:

- Integrated circuit chip.
- Eutectic bond.
- Bonded gold wire.
- Lead frames.
- Plastic separator insulator.
- Solid moulded epoxy package.
- Pin leads.

The materials and the dimensions of various sections of this electronic device are as given in the table below.

Section and Material	Thermal Conductivity (W/m · °C)	Thickness (mm)	Heat Transfer Surface Area
Junction constriction	-	-	diameter 0.4 mm
Silicon chip	120†	0.4	3 mm x 3 mm
Eutectic bond	296	0.03	3 mm x 3 mm
Copper lead frame	386	0.25	3 mm x 3 mm
Plastic separator	1	0.2	12 x 1 mm x 0.25 mm
Copper leads	386	5	12 x 1 mm x 0.25 mm

†The thermal conductivity of silicon varies greatly with temperature from 153.5 W/m · °C at 27°C to 113.7 W/m · °C at 100°C, and the value 120 W/m · °C reflects the anticipation that the temperature of the silicon chip will be close to 100°C.

a. State assumptions made for thermal analysis of the chip. [6 marks]

b. Sketch an equivalent thermal circuit of the chip. [6 marks]

c. Calculate various thermal resistances on the path of primary heat flow. [14 marks]

d. Determine the total heat resistance of the chip. [4 marks]

e. If the temperature of the leads is 40°C, estimate the temperature at the junction of the chip. [6 marks]

f. Discuss the choice of materials used in the chip and its impact towards heat dissipation. [2 marks]

7. A fan blows air at 30°C and a velocity of 200 m/min over a 1.2-W plastic DIP with 16 leads mounted on a PCB, as shown in the figure below.

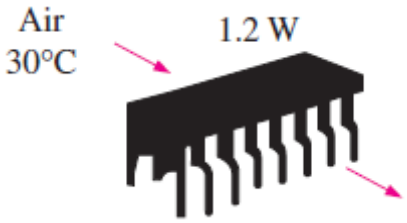

a. Using data from graph of thermal resistance vs. airflow velocity given below, determine the junction temperature of the electronic device. [6 marks]

b. What would the junction temperature be if the fan were to fail? [6 marks]

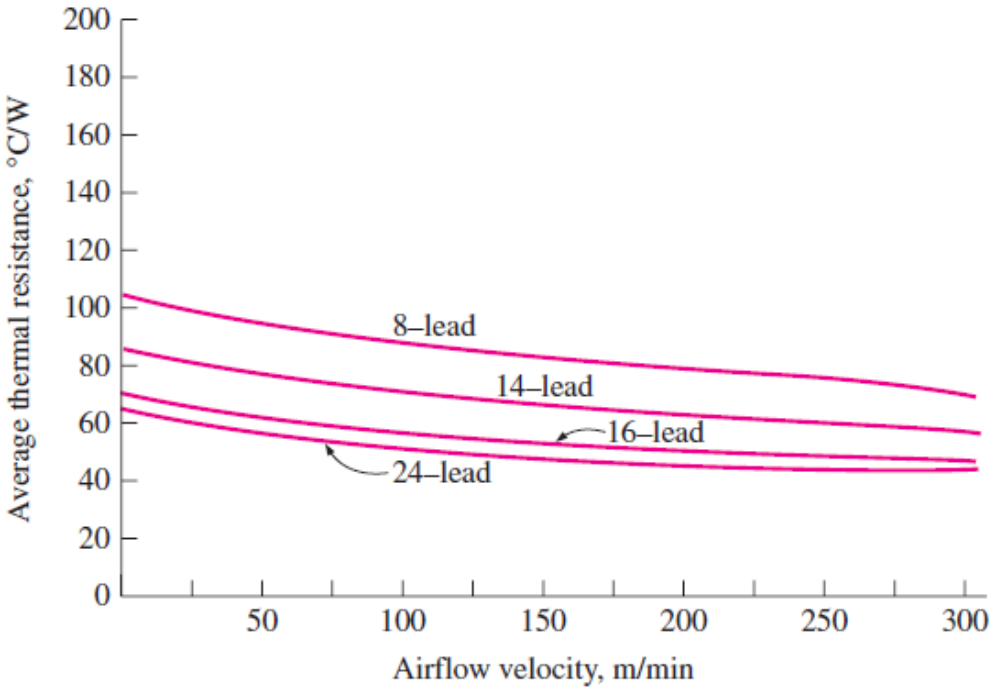

8. Heat is to be conducted along a PCB with copper cladding on one side. The PCB is 10 cm long and 10 cm wide, and the thickness of the copper and epoxy layers are 0.04 mm and 0.16 mm, respectively, as shown in the figure below.

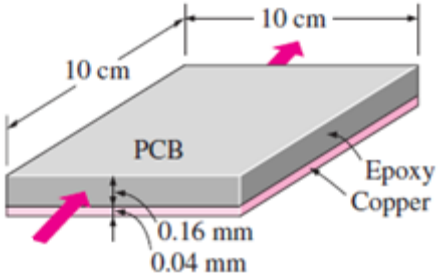

   a. Disregarding heat transfer from side surfaces, determine the percentages of heat conduction along the copper (k = 386 W/m·°C) and epoxy (k = 0.26 W/m·°C) layers. [14 marks]

   b. Also, determine the effective thermal conductivity of the PCB. [4 marks]

Section B. Noise Analysis

1. Most electronic devices exhibit some form of noise. They exhibit a spectrum of voltage and/or current fluctuations that an ideal component would not.

   a. Describe three most found noises in electronics. [6 marks]

   b. What is the main difference between white noise and pink noise? [4 marks]

c. Why are we mostly dealing with spectral noise density than noise power densities when performing noise analysis? [2 marks]

d. Derive the equation for determining the root mean square value of the noise. [8 marks]

2. The following diagram shows a typical spectral densities plot of integrated device circuit noise: (a) noise voltage and (b) noise current.

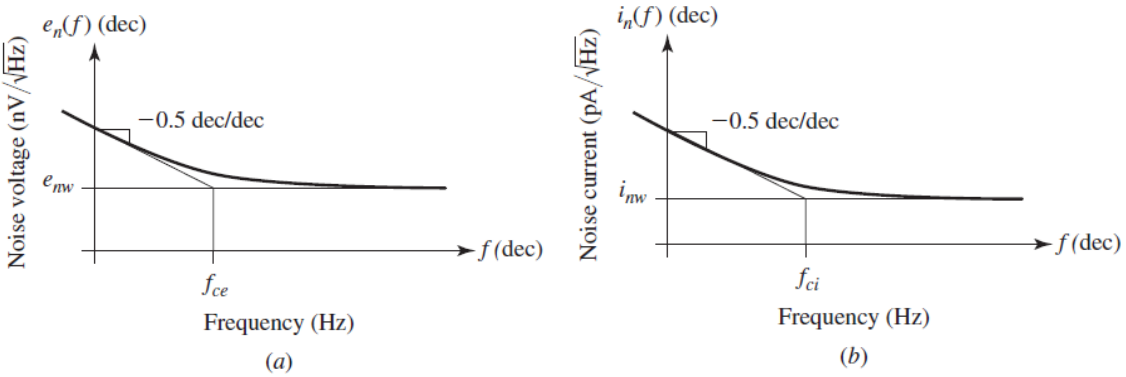

a. Derive the expressions for the noise voltage and current of integrated circuit device. [14 marks]

b. With regard to the spectral densities plot of integrated circuit noise given above, describe the characteristics of the noise at various frequencies in the plot. [6 marks]

c. Find E_n for the 741 op amp over the audio range (20 Hz to 20 kHz). [4 marks]

d. Repeat, but for the wide-band range of 0.1 Hz to 1 MHz, compare with part (c), and comment. [4 marks]

3. Given a carbon resistor with a specific resistance value for noise measurement and analysis.

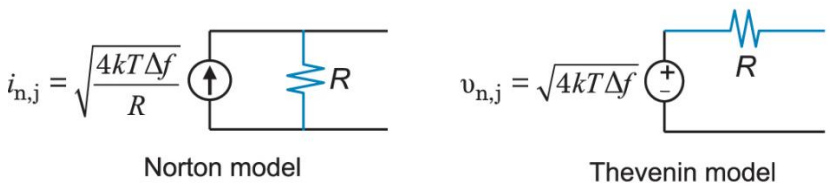

a. How is resistor noise modelled? [2 marks]

b. What is power spectral density? [2 marks]

c. How this noise is represented in the frequency spectrum. [2 marks]

d. What is voltage spectral density? [2 marks]

4. For a 100 kΩ resistor, attempt the following noise analysis tasks:

a. Noise power spectral density. [4 marks]

b. Noise voltage spectral density. [4 marks]

c. Describe the significant of the calculated results in parts (a) and (b). [2 marks]

d. By referring to the graph of noise density vs. resistance below, describe how resistance and temperature could influence the noise characteristics of a given resistor. [2 marks]

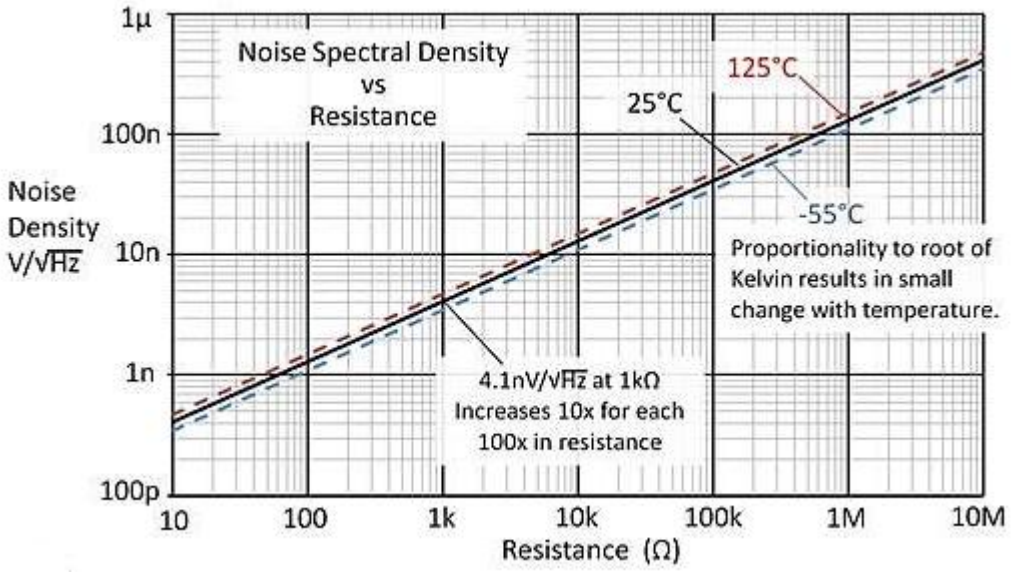

5. Noise voltage density and noise current density contributions of a PN diode are mainly due to its thermal noise of equivalent resistance in the diode and shot noise due to potential difference in the PN junction as shown below respectively.

a. Find the signal-to-noise ratio for diode current over a 1-MHz bandwidth if (i) I_D = 1 µA and (ii) I_D = 1 nA and comment on the difference. [6 marks]

b. Find a resistance that will produce the same amount of room-temperature noise as a diode operating with (i) a forward-bias current of 50 µA, and (ii) a reverse-bias current of 1 pA. [12 marks]

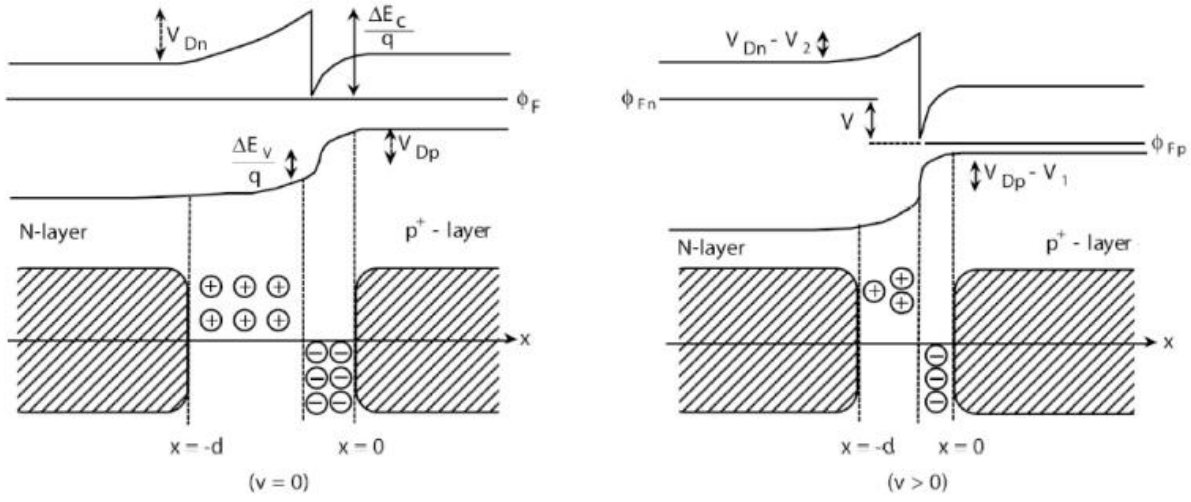

6. Determine the mean square equivalent input noise voltage, E_{ni}^2 for a 2N4250 BJT operating at a collector current of 1.0 mA, with a source resistance of R_S = 10 kΩ in a Δf = 10 Hz band of frequencies centred at 1 kHz.

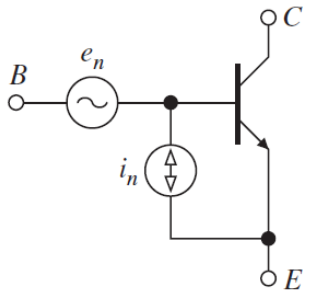

Noise data of voltage (E_n) and current (I_n) noise densities for the 2N4250 transistor are shown in the figures below. [6 marks]

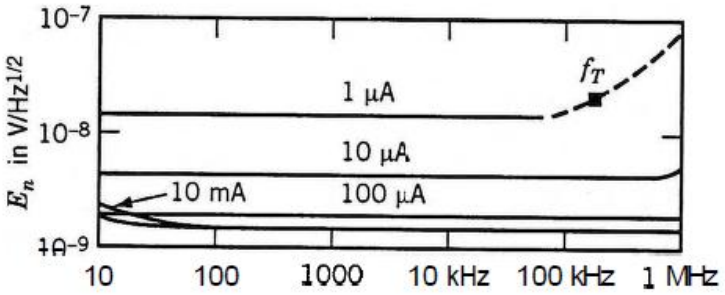

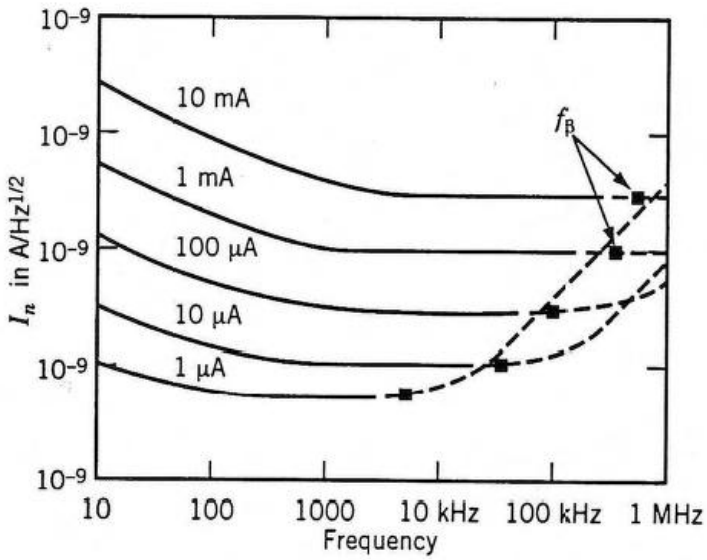

7. Given the following equivalent circuit model of op amp-based amplifier, our circuit below is a simple resistor divider with gain = 0.5 which is followed by a voltage amplifier with gain = 1 and a low-pass filter with f_c = 1 MHz. Assuming we are seeking the noise density at low frequencies where the low-pass filter has no effect. Resistors R_1 = R_2 = 100 kΩ and R_{LP} = 100 Ω and capacitor C_{LP} = 1 μF.

Notice that the voltage amplifier EAMP does not have any internal noise source and all noise sources in the circuit are from thermal noise of the resistors.

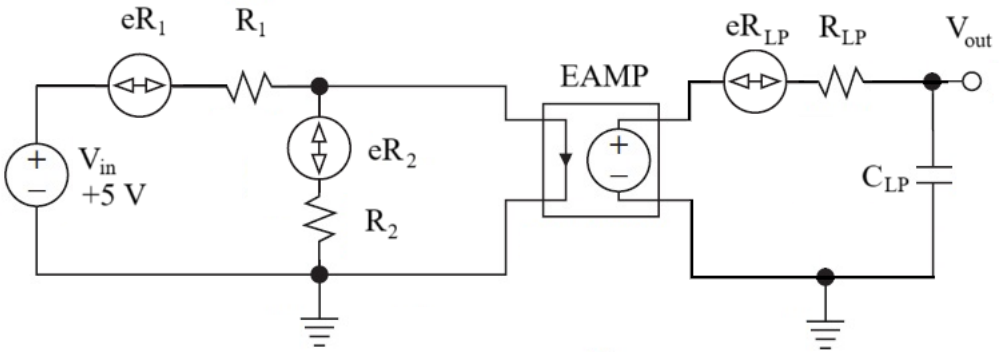

Determine how much noise from various resistors contribute at the output of the circuit by calculating the following parameters in the noise analysis:

a. Noise power spectral density of R_1. [4 marks]

b. Output noise power spectral density from R_1. [8 marks]

c. Output noise power spectral density from R_2. [4 marks]

d. Output noise power spectral density from R_{LP}. [4 marks]

e. Total output noise power spectral density. [4 marks]

f. Total output noise voltage spectral density. [4 marks]

8. You are given an op-amp based amplifier circuit as shown in the figure below. Notice that the op amp in the circuit is already compensated with a 22 pF capacitor. So, its operational characteristics are different from uncompensated op amp.

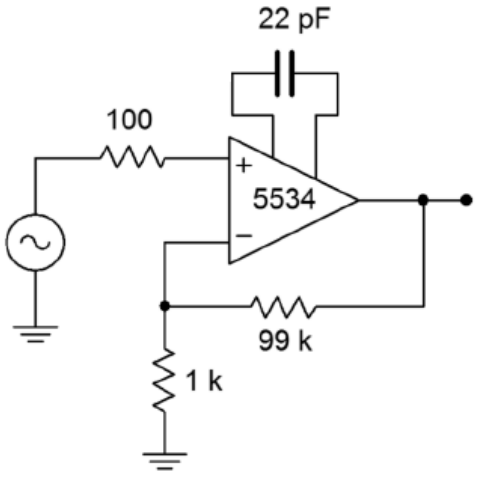

The manufacturer datasheet of NE5534 shows the following specs, V_n = 4 nV/√Hz, I_n = 0.6 pA/√Hz. These values do rise at lower frequencies, but we will ignore this effect for now. Also, f_{unity} is 10 MHz.

a. Determine the output noise voltage for the circuit. [20 marks]

b. For a nominal output of 1 V RMS, what is the signal-to-noise ratio? Assume T = 300° Kelvin (room temperature). [4 marks]

9. Given in the circuit below is a non-inverting audio preamplifier with operating frequency of 100 Hz to 10 kHz.

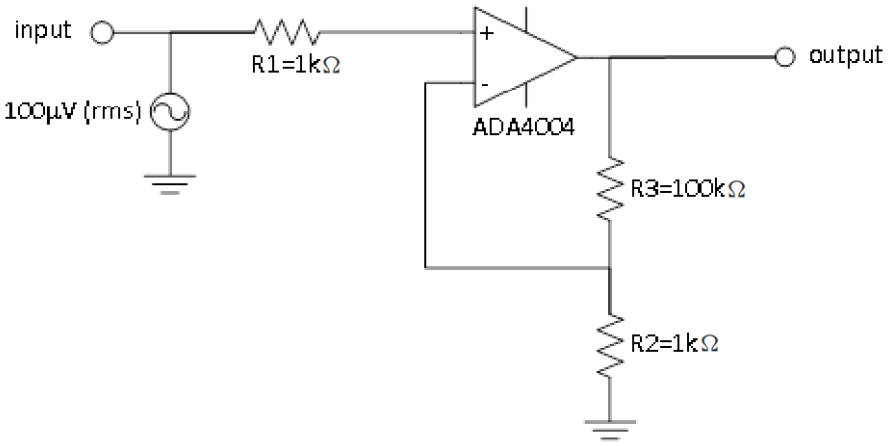

From the datasheet of AD4004 op amp (at V_{cc} = ±15 Volts and T_a = 25° C):

- Noise voltage density at 1 kHz, V_n = 1.8n V/$\sqrt{\text{Hz}}$.
- Noise current density at 200 Hz, I_n = 1.2p A/$\sqrt{\text{Hz}}$.

The non-inverting amplifier, at operating bandwidth of the circuit from 100 Hz to 10 kHz, is connected to a 100 μV (rms) signal source.

a. Determine noise model of the circuit with all noise sources included. [5 marks]

b. Determine the gain of non-inverting and inverting amplifiers. [4 marks]

c. Determine the noise spectral density of 1kΩ and 100kΩ resistors at 25°C. [4 marks]

d. Calculate the noise voltage densities at the output of the amplifier circuit due to the resistors in the circuit. [6 marks]

e. Calculate the noise voltage densities at the output of the amplifier circuit due to the op amp noise sources. [6 marks]

f. Calculate the total noise voltage densities at the output of the amplifier. [4 marks]

g. Calculate total noise at the output of the op amp. [4 marks]

h. Determine signal-to-noise ratio of the amplifier circuit at input. [6 marks]

i. Determine signal-to-noise ratio of the amplifier circuit at output. [6 marks]

j. Determine noise factor of the circuit. [2 marks]

k. Determine noise figure of the circuit. [2 marks]